REPORT DOCUMENTATION PAGE

AFRL-SR-BL-TR-00-

0522

Public reporting burden for this collection of information is estimated to average 1 hour per response, including the time ... nd maintaining the data needed, and completing and reviewing this collection of information. Send comments regarding this burden est ... ggestions for reducing this burden to Washington Headquarters Services, Directorate for Information Operations and Reports, 1215 J ... the Office of Management and Budget, Paperwork Reduction Project (0704-0188), Washington, DC 20503

1. AGENCY USE ONLY (Leave blank)	2. REPORT DATE	3. REPORT TYPE AND DATES COVERED
	November 1999	Period 11/01/97 - 09/30/99 Final Report for F49620-98-1-0094

4. TITLE AND SUBTITLE

Investigation of Dynamic Structural Models Suitable for the Simulation of Large Aircraft

5. FUNDING NUMBERS

Grant # F49620-98-1-0094
Purchase Req. #FQ8671-9800549
Project Task #2304/KS

6. AUTHOR(S)

Dr. Daniel Biezad

7. PERFORMING ORGANIZATION NAME(S) AND ADDRESS(ES)

California Polytechnic State University
Grantee: California Polytechnic State University Foundation
San Luis Obispo, CA 93407

8. PERFORMING ORGANIZATION REPORT NUMBER

Final Report-Project 53610

9. SPONSORING / MONITORING AGENCY NAME(S) AND ADDRESS(ES)

AFOSR/NM
Air Force Office of Scientific Research
Edwards AFB, CA

10. SPONSORING / MONITORING AGENCY REPORT NUMBER

11. SUPPLEMENTARY NOTES

12a. DISTRIBUTION / AVAILABILITY STATEMENT

Approved for public release, distribution unlimited

12b. DISTRIBUTION CODE

13. ABSTRACT *(Maximum 200 Words)*

The simulation of modern aircraft with lightweight structures and high bandwidth control systems requires more sophisticated modeling than the standard six degree-of-freedom representation. The objective of this work was to investigate and test methods for incorporating longitudinal structural mode vibration data into the simulation equations which would allow for variation in frequency and shape functions relative to an established baseline. Using a two-dimensional COSMOS/M™ finite element model, the thickness and the length of the aircraft model were varied to match the resonant frequency of the baseline model. The addition of forces then matched the mode shape of the computer model to the actual shape of the baseline. The results, confirmed by experimental tests, indicated that it is possible to effectively model the natural frequency and mode shape at any longitudinal location as center of gravity and/or weight is varied about a nominal condition. Moreover, the methodology allows new configuration baselines to be established by the matching of modal frequencies and shapes to external data from ground or flight tests.

14. SUBJECT TERMS

Structural Dynamics, Simulation, Vibration

15. NUMBER OF PAGES

116

16. PRICE CODE

17. SECURITY CLASSIFICATION OF REPORT	18. SECURITY CLASSIFICATION OF THIS PAGE	19. SECURITY CLASSIFICATION OF ABSTRACT	20. LIMITATION OF ABSTRACT
Unclassified	Unclassified	Unclassified	

NSN 7540-01-280-5500

Standard Form 298 (Rev. 2-89)
Prescribed by ANSI Std. Z39-18
298-102

DTIC QUALITY INSPECTED 4

INVESTIGATION OF DYNAMIC STRUCTURAL MODELS SUITABLE FOR THE SIMULATION OF LARGE AIRCRAFT

Daniel J. Biezad, Ph.D.

California Polytechnic State University

San Luis Obispo

November 1999

ABSTRACT

The simulation of modern aircraft with lightweight structures and high bandwidth control systems requires more sophisticated modeling than the standard six degree-of-freedom representation. The objective of this work is to investigate and test methods for incorporating longitudinal structural mode vibration data into the simulation equations which will allow for variation in frequency and shape functions relative to an established baseline. Using a two-dimensional COSMOS/M™ finite element model, the thickness and the length of the aircraft model were varied to match the resonant frequency of the baseline model. The addition of forces then matched the mode shape of the computer model to the actual shape of the baseline. The results, confirmed by experimental tests, indicate that it is possible to effectively model the natural frequency and mode shape at any longitudinal location as center of gravity and/or weight is varied about a nominal condition. Moreover, the methodology allows new configuration baselines to be established by the matching of modal frequencies and shapes to external data from ground or flight tests.

20001020 020

DTIC QUALITY INSPECTED 4

ACKNOWLEDGEMENTS

Acknowledgement and appreciation are owed to Mr. Fred Webster and Mr. Kurt Buehler of the Air Force Flight Test Center, Edwards Air Force Base, and to Dr. Len Sakell of the U.S. Air Force Office of Scientific Research, for their support of this research project.

TABLE OF CONTENTS

LIST OF FIGURES ..... **viii**

NOMENCLATURE ..... **ix**

CHAPTER

1. INTRODUCTION **1**

Historical Background 1

Pilot-Induced Oscillation Tendencies in Modern Aircraft 2

Problem Statement 3

Definition of Terms 4

2. LITERATURE REVIEW **6**

Longitudinal Pilot-Induced Oscillation Tendencies of YF-12 6

Powers' Uniform Beam Solution 7

Additional Simulation Models 9

3. THEORETICAL BACKGROUND **10**

Simplified Elastic Airplane 10

Model of System 11

Time History Analysis 13

4. METHOD OF INVESTIGATION **15**

Experimental Test Model and Procedure 15

Finite Element Analysis 18

5. MODELING AND SIMULATION PROCESS **21**

Establishing Baseline from GVT 21

Modeling Changes in Weight and Center of Gravity Location..... 26

Use of Matlab to Automate the Matching Procedure..... 28

6. FUTURE APPLICATIONS.....31

Alternative Aircraft Configurations.....31

Implementation into Piloted Simulation.....31

Implementation of Active Control.....31

7. CONCLUDING REMARKS..... 34

REFERENCES.....35

APPENDIXES

A. COSMOS/M™ MODELING & SIMULATION PROCEDURE..... 38

B. MATLAB™ PREDICTION PROGRAM..... 50

LIST OF FIGURES

1. Mode shape sign convention 5
2. Longitudinal control system 6
3. Powers' uniform beam solution fit of GVT data 8
4. Simplified aircraft model 10
5. Spring and mass system 11
6. Airplane test model representation with dimensions 14
7. Experimental setup 15
8. Schematic of dynamic testing 16
9. Experimental results 16
10. Finite element model 19
11. Frequency determination by model thickness 21
12. Location of applied forces 22
13. Changing magnitude of forces to match mode shape 23
14. Polynomial curve fit of FE model 24
15. Mode shape for various excitation locations 26
16. Mode shape for various model thicknesses 26
17. FE model with mass addition 27
18. MATLAB™ prediction for the YF-12 28
19. MATLAB™ prediction for the B-1 29
20. Implementation of structural modes into transfer functions 31

NOMENCLATURE

A_1	mode shape bias
A(s)	actuator transfer function
B	first bending mode
c	viscous damping coefficient, lb-sec/ft
cg	center of gravity
E	modulus of elasticity, psi
F	harmonically varying force, lbf.
F_1	maximum value of force, lbf.
F_s	stick force, lbf.
FE	finite element
FS	fuselage station, in.
FS_0	reference fuselage station, in.
GVT	ground vibration test
H(s)	Laplace transfer function, feedback loop
k	spring stiffness, lb/ft
K_1	displacement constant
K_θ	pitch attitude gain, deg/deg
L	characteristic length, in.
LCO	limited cycle oscillation
p	nondimensional constant
PIO	pilot-induced oscillation

RPO	residual pitch oscillation
s	Laplace transform
SAS	stability augmentation system
t	time, sec.
x	horizontal axis coordinate, in.
$\dot{x}$	velocity, in/sec
$\ddot{x}$	acceleration, in/sec^2
x_s	steady-state solution, in.
δ_e	elevator deflection, deg or rad
ϕ	nondimensional constant
θ	pitch attitude, deg or rad
ω	frequency, rad/sec
ω_d	damped natural frequency, rad/sec
ω_n	natural frequency, rad/sec
ζ	viscous damping ratio

Subscripts

0	bias term
d	damped natural frequency
e	elevator
n	natural frequency
s	steady-state

CHAPTER 1

INTRODUCTION

Historical Background

The understanding of aeroelastic forces and vibrations has proven to be vital to an aircraft's success since the beginning of powered flight. Perhaps the first designer affected by aeroelasticity was Professor Samuel P. Langley of the Smithsonian Institution.[1] The best explanation given for the wing failure which destroyed Langley's machine on the Potomac River houseboat in 1903 was wing torsional divergence.[1] Theoretically, torsional divergence speed is the speed at which the wing, untwisted, experiences no aerodynamic moments. However, it is theoretically capable of assuming an arbitrary amount of twist and remaining in neutral equilibrium under the airloads due to twist alone. The actual wing could twist off and be destroyed at its divergence speed. It may have been this failure of the Langley monoplane and the success of the Wright biplane, which predetermined the proliferation of biplanes in the early days of aircraft design.

When early military aircraft were almost exclusively biplanes, the most widespread early aeroelastic problem was the tail flutter problem. In particular, the Handley Page 0/400 bomber was often subjected to violent oscillations of the fuselage and tail surfaces. Upon investigation, it was discovered that the fuselage and tail had two principal low-frequency modes of vibration creating a self-excited oscillation involving coupling between the modes.[1] In one mode, the left and right elevators oscillated about their hinges 180° out of phase, while in another mode the fuselage oscillated in torsion.[1]

The early problems faced by Professor Langley and by the Handley Page 0/400 bomber showed an early indication of the interdisciplinary role that aeroelasticity would play in not only aircraft control but also in structural design. The size and flexibility of modern aircraft have created a type of aircraft in which the structural modes are on the same order of magnitude as the short-period rigid body modes. Similar to the damage that can occur when structural deformations induce aerodynamic forces which, in turn, induce greater structural deformations, a pilot can interact with structural vibrations to induce even greater structural deformations.

Pilot-Induced Oscillation Tendencies in Modern Aircraft

The strength and flexibility characteristics of large, modern aircraft structures often produce structural modes of vibration that are of the same order of magnitude as the bare airframe short-period response. For example, YF-12 pilots have occasionally reported longitudinal pilot-induced oscillation (PIO) tendencies during refueling operations caused by the interaction of the pilot with a combination of the aircraft's short-period poles and the structural first bending mode.[2] In this case, the first-order structural mode may have an effect on the handling qualities of the aircraft that should be taken into account in a piloted simulation of the vehicle. Longitudinal control system designs, such as that considered for a linearized dynamic model of a supersonic transport aircraft, are often characterized by excessive overshoot and large settling time for large, high-speed aircraft without the inclusion of aeroelastic modes in the controller.[3]

The F-16 also suffers from "limited cycle oscillation," LCO, when flying with some combinations of fuel, tanks, and weapons at high speeds. During LCO, the F-16's

wings experience bending so that while one wing bends upward, the other bends downward creating a side-to-side rolling motion in the cockpit.[4] Using an active flutter suppression system, the LCO was suppressed at the desired speeds and loadings. However, the active flutter suppression system could not be tested on a Lockheed Martin simulator since the simulator could not portray LCO.[4]

Low altitude, high speed residual pitch oscillations (RPO) have been reported on the B-2A all wing aircraft during a loads expansion test. During flight testing of the aircraft, considerable flexing and what appeared to be a shock wave moving in sync with the aircraft pitching motion were observed. It was also found that the oscillations were dependent on center of gravity (cg), outboard fuel loading, and payload. Although the exact cause of the RPO remains unknown, one of the current theories is that the RPO was the result of the interaction of aircraft structures, control surfaces, and an oscillatory shock wave on the upper surface of the aircraft.[5]

Problem Statement

Because of the complexity of simulations and the absence of ground vibration test (GVT) data, it is often difficult to implement structural modes into piloted simulations. Therefore, the purpose of this investigation is to develop a simple method to simulate the effects of structural vibrations in a piloted simulation. The process should allow for modifying the baseline configuration to match ground or flight vibration test data.

With the aid of COSMOS/M™, a finite element (FE) analysis program that runs on a personal computer, the mode frequencies and shapes of different aircraft configurations may be simulated and evaluated. This work describes the fabrication and

CHAPTER 2

LITERATURE REVIEW

Longitudinal Pilot-Induced Oscillation Tendencies of the YF-12[2]

During occasions where the pilot must maintain position through tight control of the primary control loop (such as during aerial refueling operations), there have been reports of PIO tendencies.[2] An investigation by Smith and Berry into the PIO tendencies of the YF-12 aircraft showed that the small-amplitude PIO tendency was caused by the interaction of the aircraft's short-period poles and the structural first bending modes.[2] The small oscillations experienced during aerial refueling can be particularly disturbing because it can be difficult for the pilot to distinguish between the rigid body motion and the flexing of the aircraft.

Smith and Berry differentiate between Type I and Type II PIO's. The focus of this investigation is with the small amplitude, longitudinal Type I PIO's because they can be simulated with the linearized transfer functions shown in Figure 2. The first structural

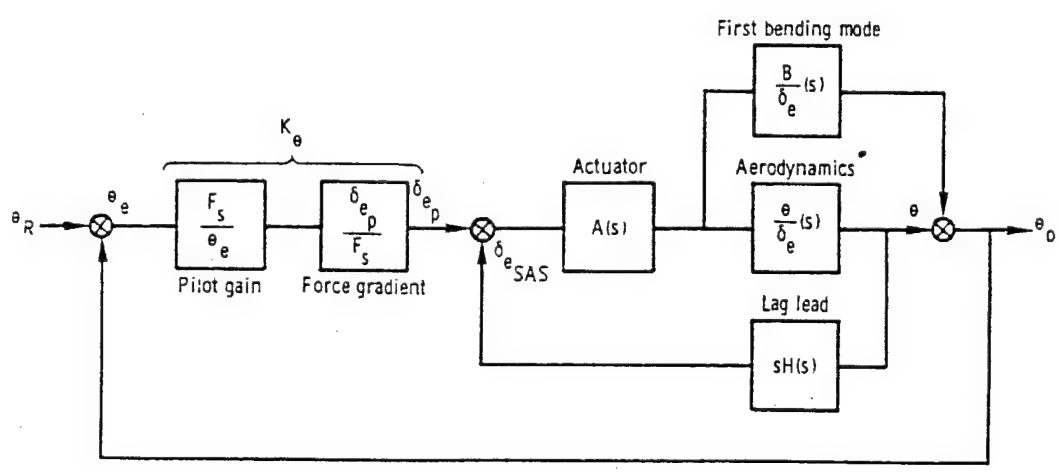

Figure 2. Longitudinal control system (from NASA TN D-7900[2])

bending mode can then be incorporated into the longitudinal control system by summation. Smith and Berry's model depicted in Figure 2 shows the elements of the control system, where θ_o is the pitch angle sensed at the pilot's station and θ is the rigid body pitch angle. Because of the relatively small amplitudes, a linear analysis can be used to analyze the problem.

Powers' Uniform Beam Solution[6]

A significant attempt to combine simulation and structural equations was accomplished by Powers[6] for the YF-12 strategic reconnaissance aircraft. Powers assumed the simple dynamic shape function of a uniform beam for the primary structural mode shape, and defined the parameters to be adapted to flight test data. He defined the displacement constant, K_1, as the sinusoidal function

$$K_1 = \sin\left(\frac{px}{L} + \phi\right) + A_1$$

where K_1 is the distribution of the response for locations along the fuselage. The equation has three variables, L, p, and A_1, which can be used to fit a particular mode shape. The nondimensional beam length is x/L and the constant ϕ is defined by Powers as $\phi = 0.75\pi$.

To create a bias so that the structural coordinate system of the uniform beam solution is coincident with the aircraft coordinate system, Powers created a bias between the two coordinate systems so that $x = (FS - FS_o)/12$ where FS is the fuselage station of the aircraft in inches. By changing the parameters so that FS_o corresponds to the center of the beam where the slope is zero, Powers rewrote the deflection constant as

testing of a scalable model that generates the longitudinal modal frequencies and shapes of actual aircraft. Results from matching experimental and FE predictions justify continuing this approach for generic aircraft models.

The general idea is to determine the simplest FE model and modeling process which matches the modal frequencies and shape of a given baseline. The process chosen should be scalable to large aircraft applications and must be initiated by determining a nominal frequency of an actual aircraft configuration (baseline) to be matched. The thickness of the FE model should be varied so that its resonant vibration frequency matches this value. After the establishment of this initial baseline configuration, a FE analysis will be used to find the sensitivity of modal frequencies and shapes to center of gravity (excitation location) and weight (thickness) changes for any sensor location along the longitudinal axis. The resulting shape function will determine the effect of longitudinal vibration on the flight simulation equations of motion for the aircraft.

The purpose of this work is to use a FE technique to accommodate more than one longitudinal mode, to account for the lack of proper fit at the aft limit of the aircraft, and to identify model parameters that can be adapted to test data.

Definition of Terms

As modern aircraft structures have become more lightweight and more flexible, aeroelasticity has become a more important part of aircraft design. When structural deformations induce additional aerodynamic forces, these aerodynamic forces may, in turn, induce greater structural deformations creating potentially devastating damage to the aircraft. The term aeroelasticity signifies the interaction among inertial, aerodynamic,

and elastic forces. Specifically, dynamic aeroelasticity refers to the interaction among all three forces, while static aeroelasticity combines only aerodynamic and elastic forces. The scope of this investigation is limited only to the simulation of the mode shape as the result of structural vibrations.

The structural mode shape is defined in terms of structural deflection at a particular fuselage location. A positive deflection is defined to be above the z-axis as shown in Figure 1.

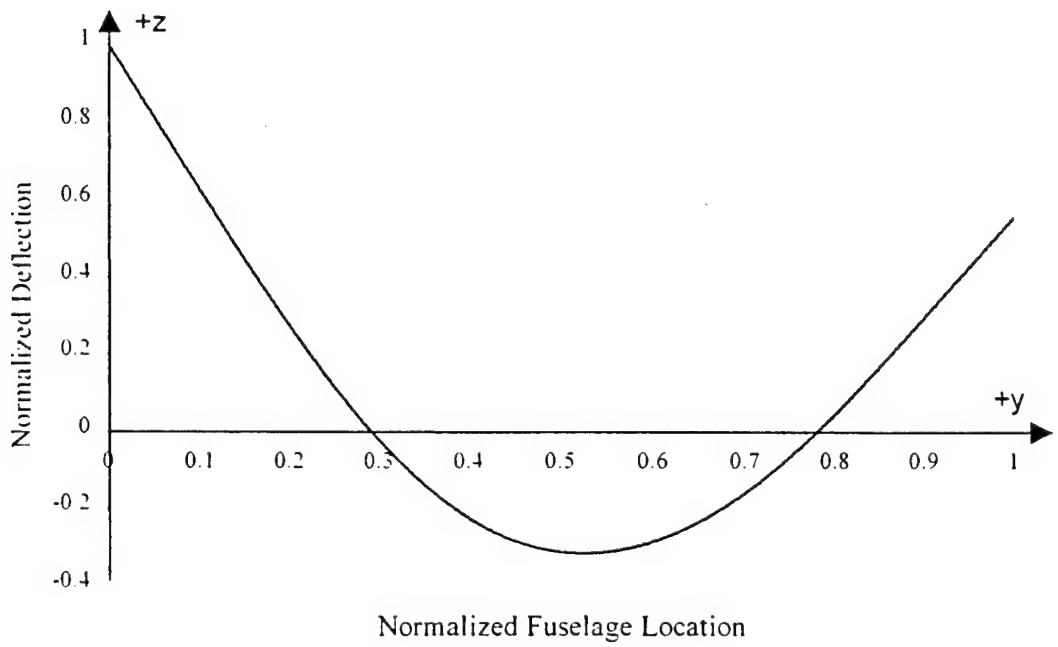

Figure 1. Mode shape sign convention

$$K_1 = -\cos\left(1.5\pi \frac{FS - FS_o}{12L}\right) + A_1$$

Powers tested his assumption that the sinusoidal form of the uniform beam solution can reasonably represent an actual aircraft mode shape by attempting to fit GVT data from the YF-12 aircraft.[6] With an inflection point located at FS_o 798 and a bias, A_1, of 0.72 (as opposed to the uniform beam solution of 0.267), the uniform beam solution provided a good fit of the actual aircraft deflection (obtained from ground vibration testing) except near the aft end of the aircraft as shown in Figure 3.

The mode shape, which expresses fuselage deflection as a function of fuselage location, can be used to develop transfer functions suitable for flight simulation. Deflections from the dynamic equations that describe this mode shape can be added to the rigid body motion to obtain the total deflections of the aircraft structure.

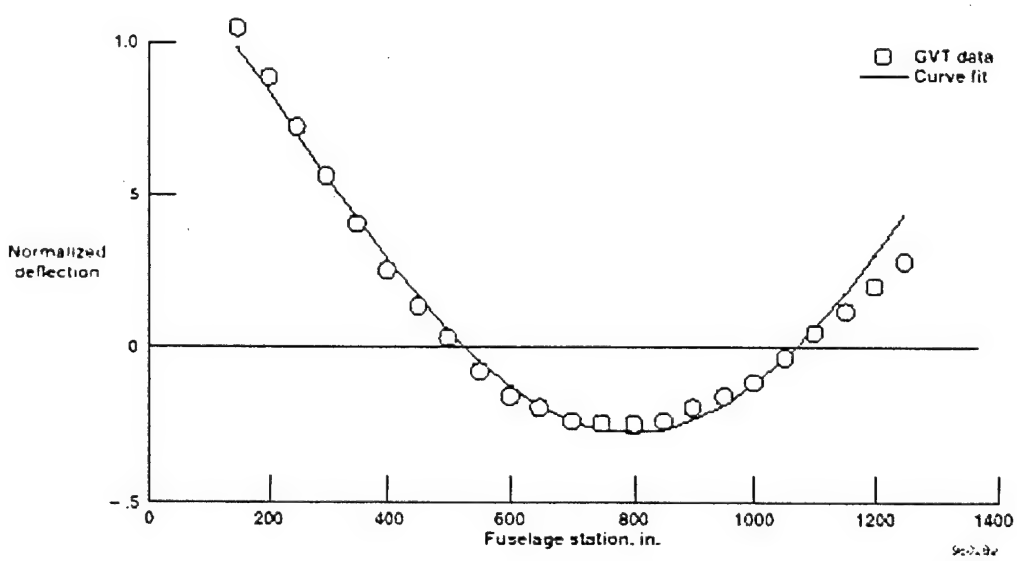

Figure 3. Powers' uniform beam solution fit of GVT data (from NASA TM 4747[6])

Additional Simulation Models

The background literature[7-11] available on flight simulation models shows that it is acceptable to assume that the non-linear simulation equations may be augmented with linear structural vibration equations to adequately describe the resulting motion of large aircraft as seen by the pilot. The effects of structural vibrations have also been successively simulated using a lumped-mass dynamic model[12] and aircraft loads prediction has been achieved through the use of finite element aerodynamics.[13-14] However, these models are complex and difficult to implement in piloted simulations and are not easily adapted to experimental and test data.

CHAPTER 3

THEORETICAL BACKGROUND

Simplified Elastic Airplane

Because of the complexity of aircraft structures, it is often necessary to introduce a simplified aircraft model in order to perform the elastic properties computations. Traditionally, the wings, fuselage, and the horizontal and vertical tails have been regarded as beams. Using this simplifying assumption, the displacement can be represented by two linear displacements and one angular displacement (as shown in Figure 4).

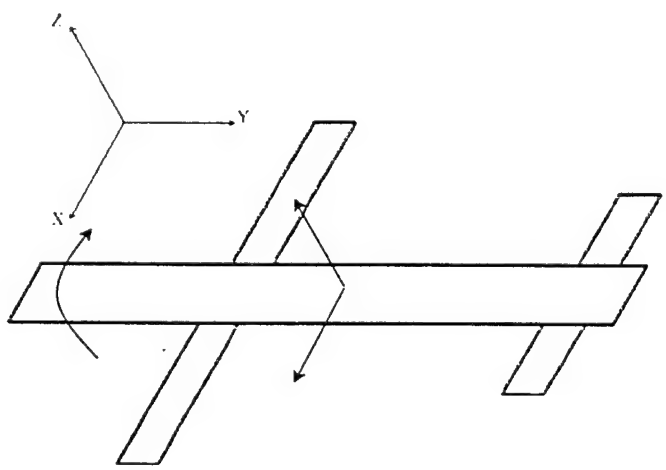

Figure 4. Simplified aircraft model

However, in cases that involve thin wings of very low aspect ratio, it may not be accurate to assume that the wing is rigid in cross section; therefore, an allowance must be made for chordwise bending. In these cases, the wing can be regarded as a thin flat plate. For the purposes of this investigation, the aircraft is modeled as a collection of flat plates

and the deflection of the fuselage can be represented by the displacement in the z-direction.

Model of System

In this investigation, the excitation of the flat plate was provided by a forced harmonic vibration. This excitation can be modeled as a one degree of freedom spring and mass system subjected to a harmonically varying force,

$$F(t) = F_1 \sin \omega t$$

where F_1 is the maximum value of the force and ω is the frequency with which the force varies (in rad/sec). As shown in Figure 5, the equation of motion is

$$-kx - c\dot{x} + F(t) = m\ddot{x} \qquad \text{Eq. 1}$$

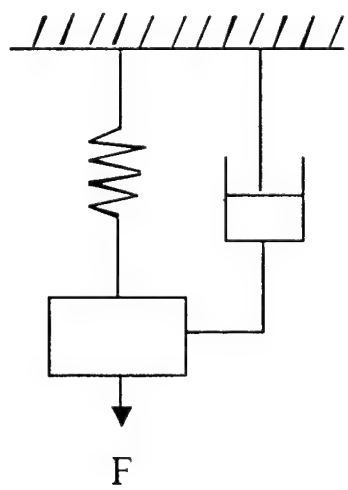

Figure 5. Spring and mass system

where k is the spring stiffness, c is the viscous damping coefficient, m is the mass, and x is the displacement. Rearranging the terms,

$$m\ddot{x} + c\dot{x} + kx = F_1 \sin \omega t \qquad \text{Eq. 2}$$

For convenience, the substitution

$$\omega_n = \sqrt{k/m}$$

and the viscous damping ratio, ζ,

$$\zeta = \frac{c}{2m\omega_n}$$

are introduced. It should be noted that ω_n is a property of the system and that ω is a property of the force applied to the system. The complete solution to Equation 2 is the sum of the transient solution, which is the general solution of Equation 2 with the right side equal to zero, and the steady-state solution, which is any solution to the complete equation.

In order to solve the equation of motion, a solution of the form

$$x = Ae^{\lambda t}$$

is assumed. Substituting this term into Equation 2 and equating the right side equal to zero gives the characteristic equation

$$\lambda^2 + 2\zeta\omega_n\lambda + \omega_n{}^2 = 0$$

whose roots are

$$\lambda_1 = \omega_n\left(-\zeta + \sqrt{\zeta^2 - 1}\right) \qquad \lambda_2 = \omega_n\left(-\zeta - \sqrt{\zeta^2 - 1}\right)$$

By superposition, the general solution is

$$x = A_1 e^{\lambda_1 t} + A_2 e^{\lambda_2 t}$$

The steady-state solution of Equation 2 is

$$x_s = X \sin(\omega t - \phi)$$

where

$$X = \frac{F_1/k}{\{[1-(\omega/\omega_n)^2]^2 + [2\zeta\omega/\omega_n]^2\}^{1/2}}$$

and

$$\phi = \tan^{-1}\left[\frac{2\zeta\omega/\omega_n}{1-(\omega/\omega_n)^2}\right]$$

Therefore, the complete solution for an underdamped system can be written as

$$x = Ce^{-\zeta\omega_n t}\sin(\omega_d t + \psi) + X\sin(\omega t - \phi)$$

while C and ψ are variables which are determined from initial conditions and ω_d is the damped natural frequency defined as

$$\omega_d = \omega_n\sqrt{1-\zeta^2}$$

The transient term is dependent on initial conditions (after a period of time, the influence of these terms is small), however the steady-state solution is the solution of primary interest.

Time History Analysis

Equation 1 is the equation of motion for a linear dynamic system. In a time history analysis, the normal mode method is first used to obtain the uncoupled equation of motion. Then, a step-by-step integration method (Newmark method) is used to evaluate the response of each mode. Using the results obtained in one previous step to solve for those in the next step, the integration is performed in the time domain starting from the time at the last step and ending with the time at the current step. The accuracy of

the solution depends on the number of modes considered, the accuracy in modeling, and the integration increment or time size. For systems under the influence of force excitations, it is essential that all modes that contribute to the static deformation shape of the structure are considered. For the purposes of this investigation, only the first and second mode shapes are considered. The model accuracy depends on the number of nodes used to construct the model (34,443 nodes) and was verified by experimental methods (as discussed in the following section).

CHAPTER 4

METHOD OF INVESTIGATION

Experimental Test Model and Procedure

The 2-dimensional representation of the aircraft was tested and fabricated to correspond to the scaled geometry of a known large aircraft as shown in Figure 6. A spring was added to simulate the vibration of the aircraft. Constructed from 6061 Aluminum (Modulus of Elasticity, E, equals 10.1×10^6 psi), this 22-inch flat plate model

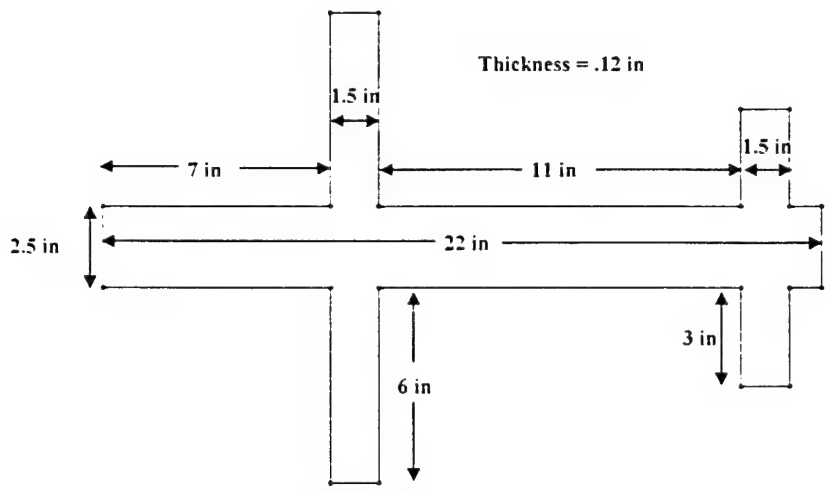

Figure 6. Airplane test model representation with dimensions

was connected to the shaker table via a spring (see Figure 7). The shaker table was connected to an amplifier that was connected to a function generator, which produced a sine wave. By varying the frequency of the sine wave, the fundamental bending mode and second bending mode were discovered and recorded.

Traditionally, the test programs of aircraft include "shake testing" to determine the normal modes of vibration. Because of the simplicity of the structure, only one shaking force was required. If the shaking frequency is varied slowly while the

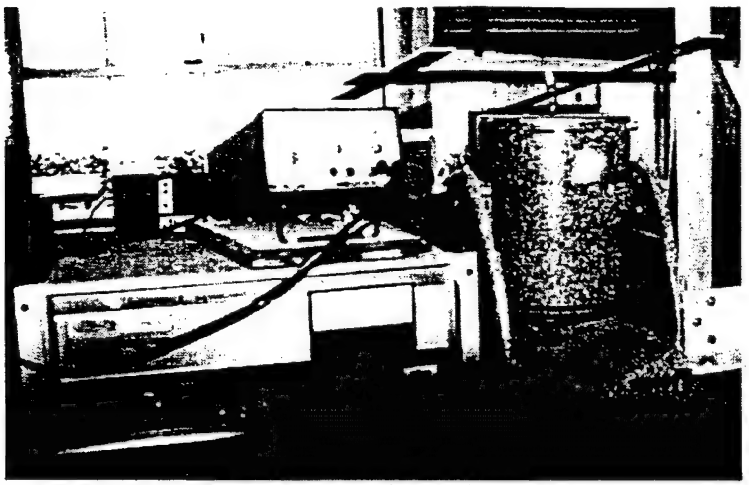

Figure 7. Experimental setup

magnitude of the shaking force is maintained, the natural frequency can be obtained. To identify the resonant lines of the test specimen, a function generator was used to scan through the frequencies ranging from 0 to 500 Hz. Resonant frequencies were identified by sharp rises in amplitudes, visual plate displacements, and the formation of node lines using sugar traces. In order to pinpoint the first two bending modes, small amounts of sugar were poured on the plate. When the sugar granules formed straight lines, the locations of "zero displacement" on the wing could be detected. By counting the number of locations with "zero displacement" and noting their locations relative to the fixed screw in the cg of the plane, the bending modes were discovered. A schematic of the experimental setup for dynamic testing of the plate model is presented in Figure 8.

The experimental results show that the observed vibration frequency and mode shape for the first longitudinal mode match the finite element model very closely. A comparison of the predicted COSMOS/M™ natural frequency to the experimental natural frequency was conducted with the aid of LabVIEW™ software. A ceramic sensor was attached to the experimental model in order to obtain the frequency response of the model

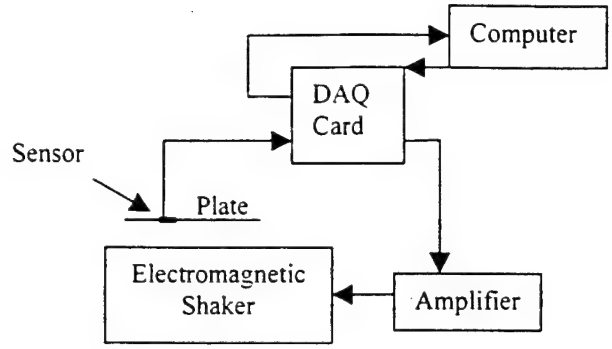

Figure 8. Schematic of dynamic testing

to random excitations. Figure 9 shows the results of this investigation. Each peak corresponds to a different natural frequency response of the model. The experimental results predict a natural frequency of the first mode to be approximately 50 Hz. These experimental results match the COSMOS/M™ predicted value of 52 Hz within 4%.

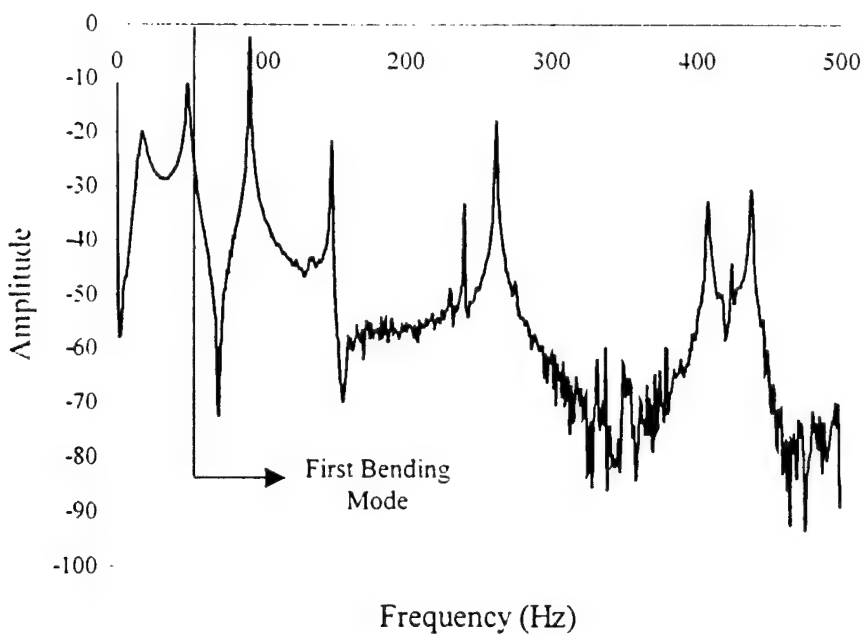

Figure 9. Experimental results

Finite Element Analysis

Data presented in this section originates from multiple finite element analyses of various configurations of the original 2-D aircraft model. COSMOS/M™ was used to perform the analysis. Each model consisted of two parts. The first part was the aircraft model and the other was the spring representation. Using the same dimensions as the test model, the first part (aircraft model) was constructed from points and surfaces in COSMOS/M.™ The resulting COSMOS/M™ drawing was modeled as a 2-D four-node shell surface. The material was specified as aluminum 6061 matching the material of experimental model. In order to represent the frequency of the experimental model accurately, the thickness was specified as 0.12 inches. The next step was to mesh the surface with elements. Eighty-eight elements were added along the length of the fuselage, and four elements were added along the width. Six elements were added along the half-span of each wing and six elements were added in the chordwise direction. Three elements were added along the half-span of the tail and six were added in the chordwise direction of the tail. A numerical accuracy study conducted by varying the number of elements determined that the number of elements specified yielded accurate results. For the second part of the model, the spring representation was added. A curve, specified as a spring element composed of steel alloy, with a spring constant of 50 lb/ft, was added to the cg location of the model. The real constants were left at default settings (i.e. the spring was given only one degree of freedom). The spring was meshed as one element with two nodes. Finally, the nodes were merged and compressed and the constraints (boundary conditions) were added. Figure 10 shows the resulting COSMOS/M™ model.

A frequency analysis was done, and the first and second bending modes were found by observing the resulting deflection.

To determine the actual deflection of the aircraft model, a step-by-step integration method (Newmark method) was used to evaluate the response of each mode. Integration was performed in the time domain using the results obtained in the previous step to solve for the next step.

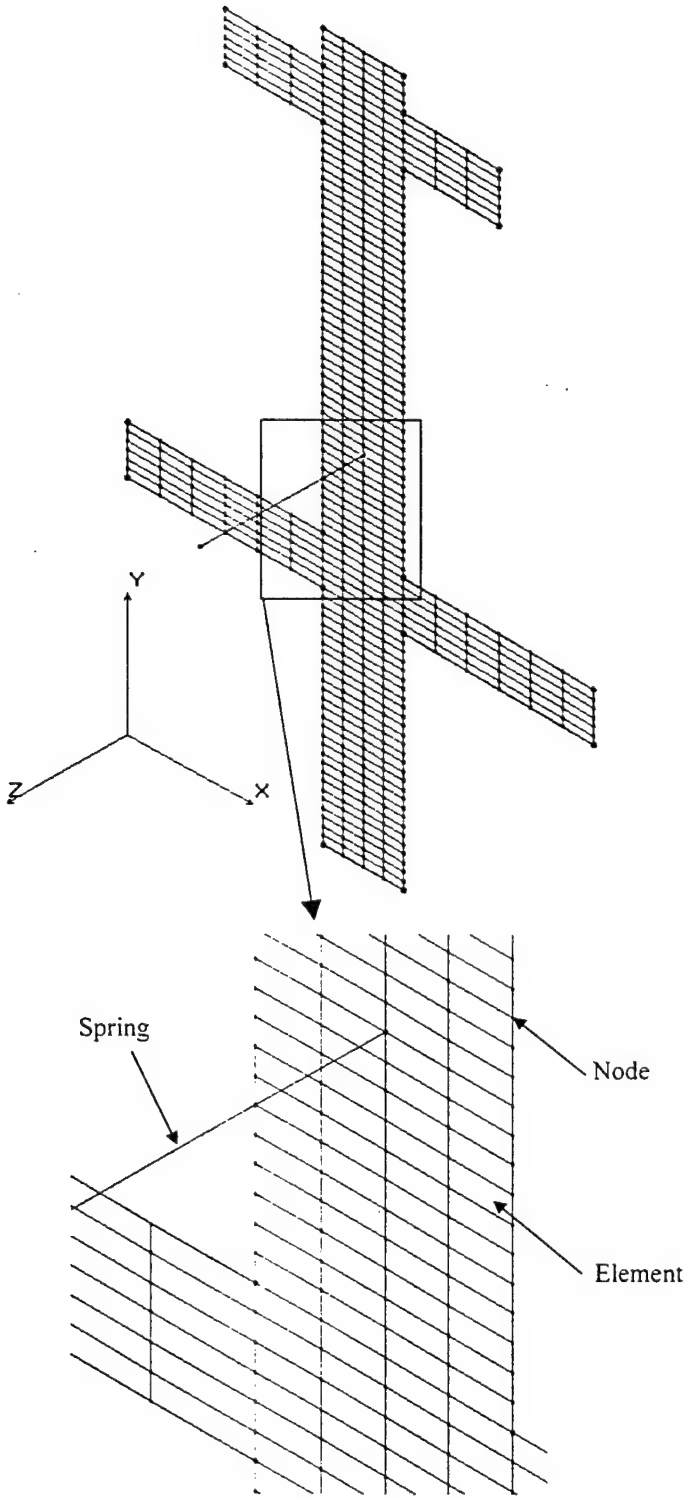

Figure 10. Finite element model

CHAPTER 5

MODELING AND SIMULATION PROCESS

Establishing Baseline from GVT

The most significant structural dynamic response of the aircraft relative to handling qualities is the longitudinal first bending mode. Piloted simulations seldom include the structural modes because of the complexity involved. The purpose of this study was to develop an easy method to model the structural modes of large aircraft that can be used in a piloted simulation and that can be calibrated by flight data.

To be implemented into a piloted simulation, the accuracy of the shape function is vital not only for the motion at the pilot station, but also for modeling the effects of varying locations for sensors and smart structure actuators. Powers[6] modeled GVT data obtained for the YF-12 aircraft. In this study, a curve fit for the data was obtained using the sinusoidal of the uniform cantilever beam solution. This solution was found to provide a good fit except at the aft ends of the model. There is a need to establish a baseline model that can be modified by weight variations and center of gravity changes about a nominal condition. To fulfill this task, a generic FE element model was created. In this case, the aircraft was treated as a combination of a fuselage (including the tail) and left and right wings.

In order to demonstrate the process used for matching GVT data, the frequency and first structural bending mode of the YF-12 aircraft is matched as described below. The first step is to match the frequency of the structural vibrations. By changing both the length and the thickness of the FE model, the frequency from the GVT can be matched.

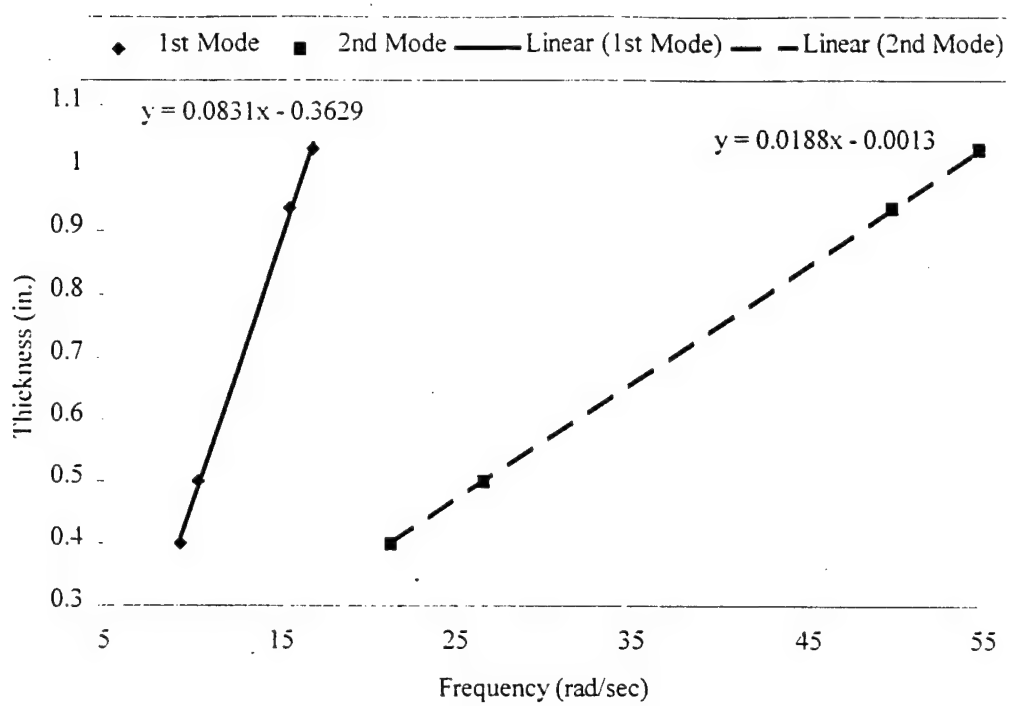

Figure 11. Frequency determination by model thickness

Figure 11 shows the thickness of the model as a function of frequency for both the first and the second bending modes. From Figure 11, the thickness required to match the 15.7 rad/s frequency of the YF-12 was 0.936 in. with a model length of 22 ft. The 15.7 rad/s is within the range of frequencies that can be achieved with a 22 ft. model. To achieve a frequency beyond the range of this graph, the length of the model can be increased or decreased to give a lower or higher frequency, respectively.

Once the frequency of the FE model has been defined, the structural bending mode can be matched by applying forces to various points on the fuselage. Because the force is attached to the aircraft model, and therefore vibrates at the same frequency of the model, the use of a constant force applied to the fuselage does not alter the frequency of the model. Therefore, the mode shape can be adjusted without iterating to find the frequency. By applying forces to the nose, to the aft end, and around the center of gravity

location on the fuselage, changing the magnitude of the forces can alter the mode shape. Using the relationship between the deflection and the magnitude of the forces, the magnitude of the forces required to match the mode shape can be determined for the parameters (length and thickness) of a given model.

Figure 12 shows a side view of the placement of the forces on the FE model and the resulting mode shape. The forces applied to the nose, aft end, and near the center of gravity are constant forces. The force applied at the center of gravity provides a harmonic force to simulate the vibration of the aircraft in a time history analysis. This force takes the place of the spring used in the frequency analysis. Figure 13 shows the relationship between the deflection of the model as a function of the magnitude of a force applied at the nose of the fuselage. The three curves on the graph refer to three different locations along longitudinal direction of the fuselage.

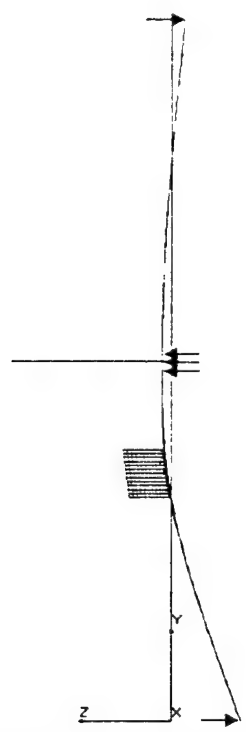

Figure 12. Location of applied forces

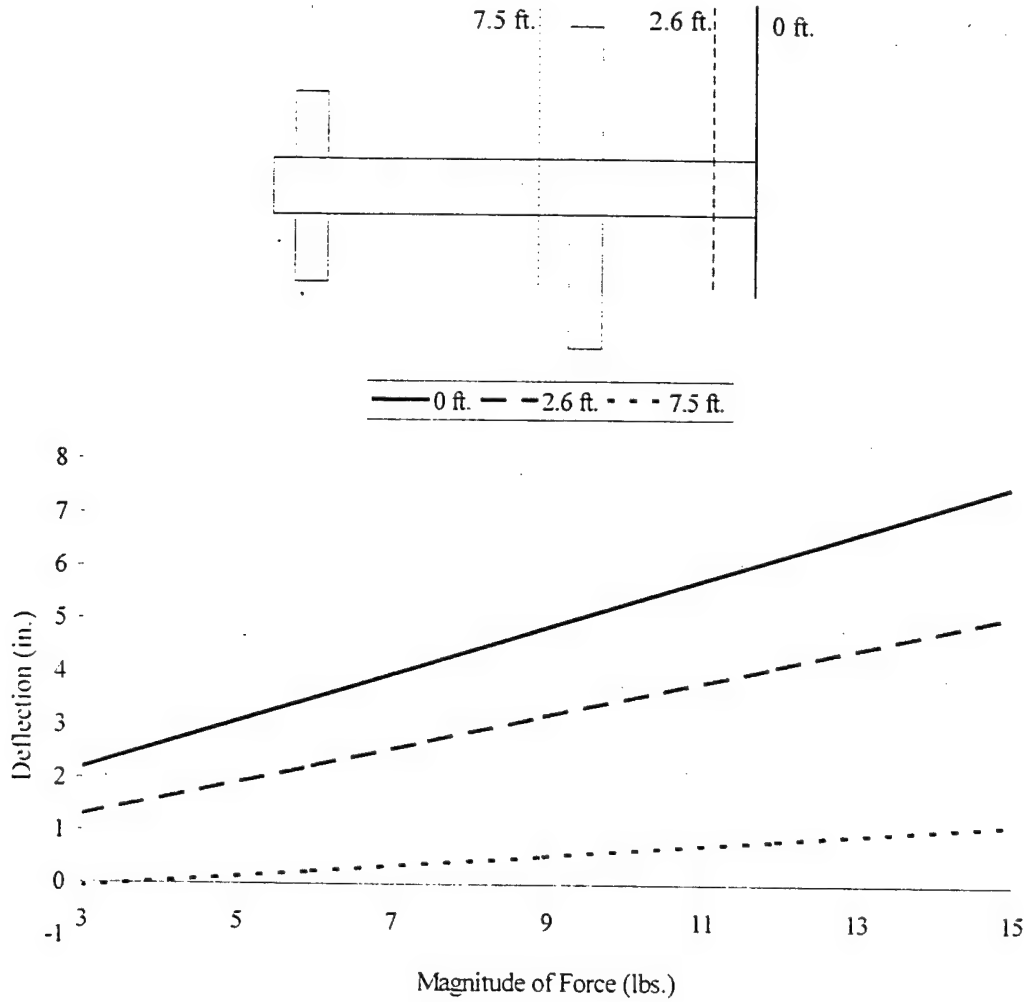

Figure 13. Changing magnitude of forces to match mode shape

Using a series of curves relating the magnitude of the deflection with the associated magnitude of the applied force, the mode shape can be found by iterating the forces for a required deflection. Note that a different set of curves is required for each variation in length and thickness. The resulting match between the FE model and the GVT data (as read from Reference 6) is shown in Figure 14. From the plot of the deflection, a polynomial equation was determined by curve fitting the data. Using this method, the GVT data and the FE data matched within 1.6% error. This equation can be

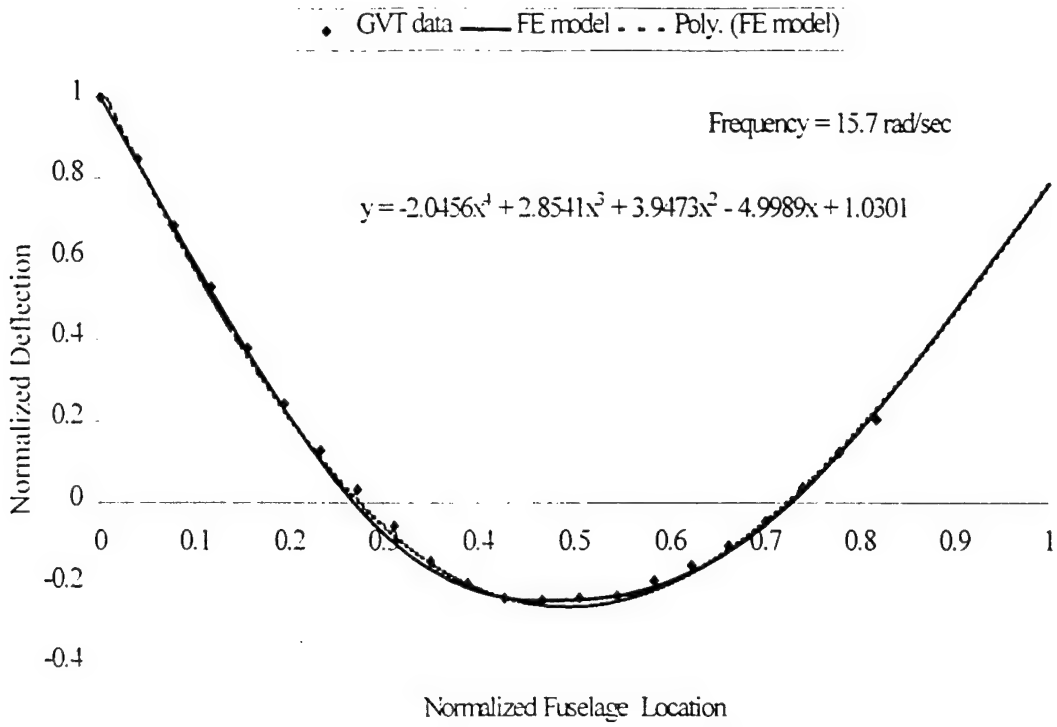

Figure 14. Polynomial curve fit of FE model

easily implemented into a piloted flight simulation to provide the deflection as a function of fuselage location. A tutorial for this process can be found in Appendix A.

The second structural bending mode requires a more complex process in order to provide the necessary data for matching purposes. The frequency can be matched using the same method as for the first bending mode (see Figure 11). However, COSMOS/M™ cannot determine the deflection using the addition of forces for the second bending mode with the time history analysis method. To modify the mode shape for the second mode, additional mass can be added to the FE model (which does not affect the condition of interest). However, the addition of mass changes the frequency creating an iterative process between matching the frequency and matching the deflection.

Modeling Changes in Weight and Center of Gravity Location

One of the main issues in providing simulation support for flight research is that the structural modes available from either a prediction or a GVT often do not correspond to the configuration currently being tested. Because of cost and time constraints, it may not be feasible to update the structural dynamic models for each configuration. As a result, a simple method that can predict the changes in the structural model due to changes in the weight or cg location of a baseline aircraft configuration has been developed.

Changes in the cg location around a baseline configuration can be predicted by changing the excitation location of the FE model. Figure 15 shows the changes in the mode shape as the excitation location is varied. The curves, representing three different cg locations, in Figure 15 are all normalized so the curves can be compared and contrasted. To normalize the curve, each data set was divided by the maximum deflection and the maximum fuselage location. As shown, moving the cg location aft decreases the deflection at the nose and increases the deflection at the tail.

Simulating changes in the weight or weight distribution of an aircraft can be accomplished by adding mass or thickness to the FE model. Figure 16 shows the resulting mode shape changes created by adding thickness to the FE model. In addition, the frequency of the model correspondingly increases as thickness is added to the model, as expected when the weight of an aircraft increases. Figure 17 shows a FE model with mass added. Adding a lumped mass to the FE model reduces the frequency by damping the vibrations while also deflecting the mode shape.

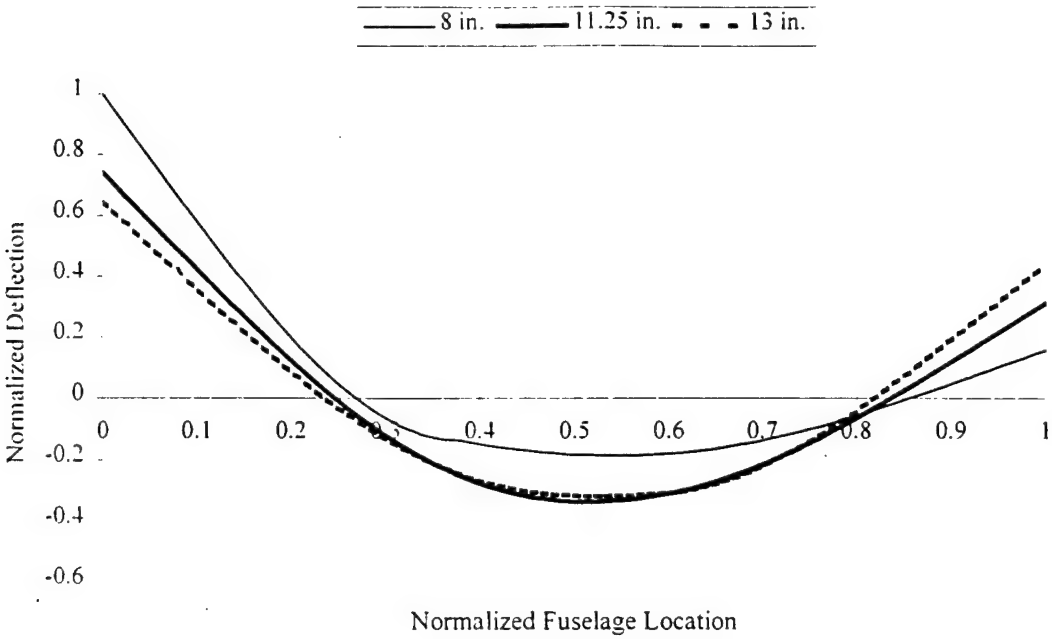

Figure 15. Mode shape for various excitation locations

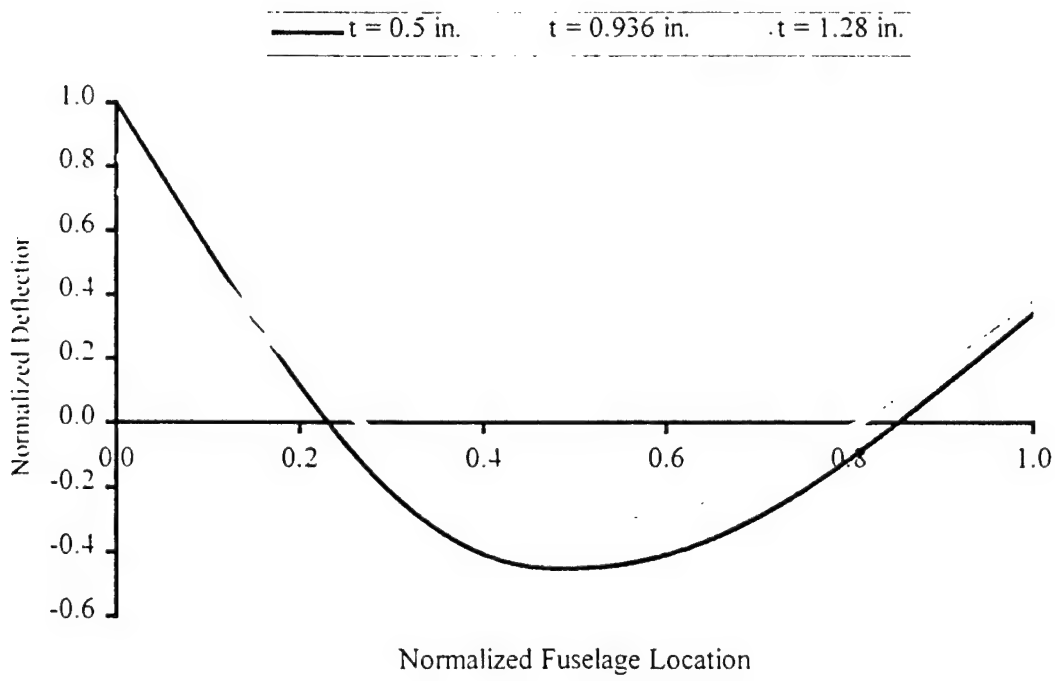

Figure 16. Mode shape for various model thicknesses

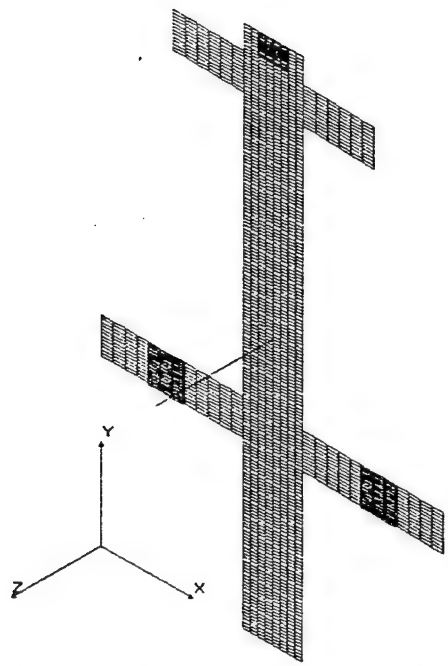

Figure 17. FE model with mass addition

Use of MATLAB™ to Automate the Matching Procedure

A MATLAB™ program (see Appendix B) has been developed to facilitate the determination of forces given a baseline configuration. Once the baseline GVT data has been copied into a MATLAB™ file, the MATLAB™ program uses a database of previously run FE models to interpolate for the magnitude of the required forces in order to match the GVT data using the COSMOS/M™ program. Because the program assumes superposition of the deflection for each of the forces, the magnitude of the forces from the MATLAB™ program is only an approximation.

The database consists of data gathered by varying the magnitude of the applied force at the tail, nose, and center of gravity of the FE model as well as the thickness of

the FE model. First, the program matches the frequency of the GVT data by iterating the model thickness for the correct frequency. Then the force at the cg is iterated to find the appropriate force needed to achieve the deflection of the GVT data. This process is repeated at both the tail and the nose locations.

This program was designed to reduce the number of iterations needed to reach an acceptable match to the GVT data using the COSMOS/M™ method. Therefore, for the purposes of this program, it was assumed that the deflections caused by the addition of forces could be linearly added. In addition, the changes in deflection caused by changes in the model thickness were ignored.

This prediction program was tested on GVT data from the YF-12[6] and from the B-1.[15] The difference between the MATLAB™ prediction and the COSMOS/M™ calculation for these two aircraft is shown in Figures 18 and 19, respectively. The ability

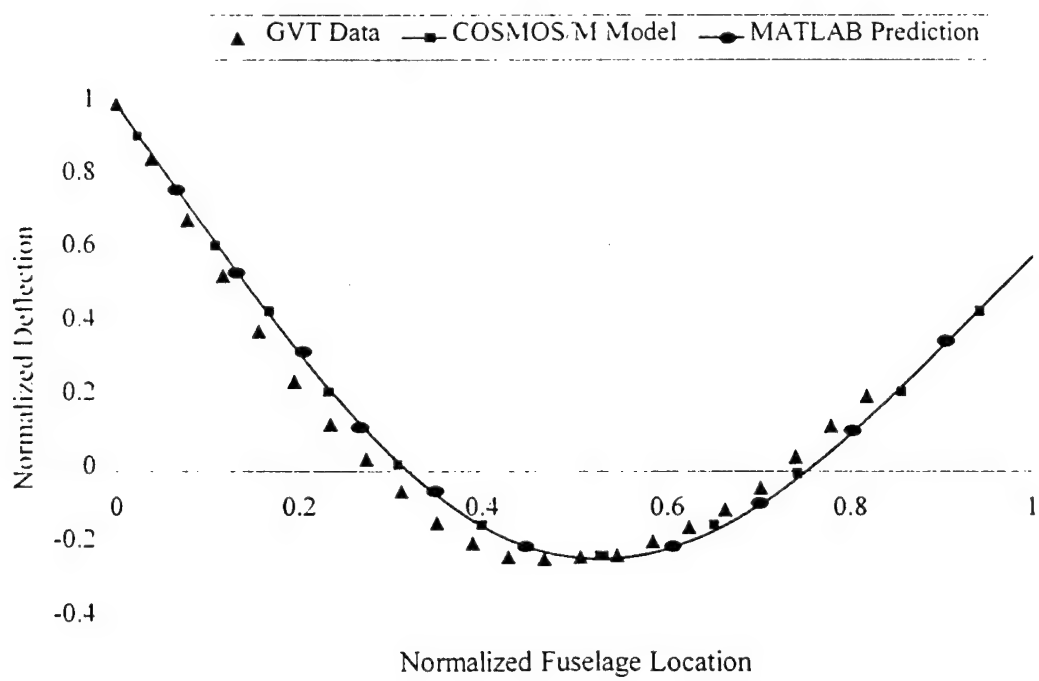

Figure 18. MATLAB™ prediction for the YF-12

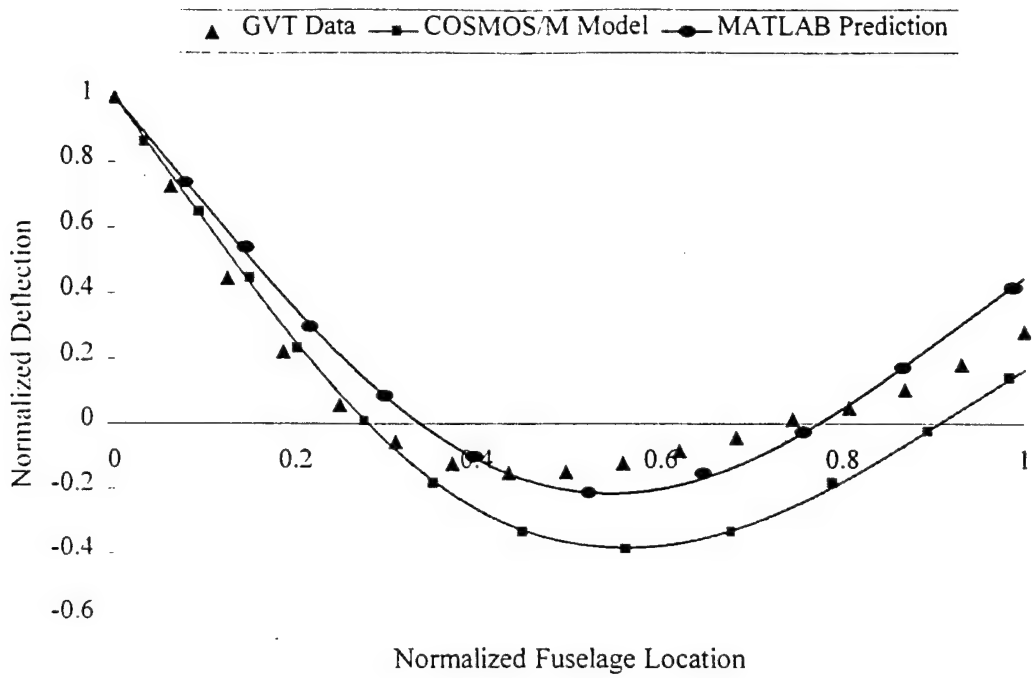

Figure 19. MATLAB™ prediction for the B-1

of the MATLAB™ program to predict the mode shape accurately depends on the correlation of the GVT data to the models used in the database. As the mode shape of the GVT data diverges from the mode shape of the models in the database, the error increases.

CHAPTER 6

FUTURE APPLICATIONS

Alternative Aircraft Configurations

The process to match GVT data can be expanded to include different aircraft configurations. For example, the flying wing configuration can be modeled using the procedure developed in this investigation by modeling the flying wing as a triangular flat plate. The structural mode shape of the flying wing could be modeled in the longitudinal axis of the beam. Then, the method can be followed as previously prescribed. Different aircraft configurations can be modeled using various flat plate configurations with the same modeling technique.

Implementation into Piloted Simulation

For flight simulation, the relationships between the structural and the mean axis and between the deflected fuselage and the mean axis for a variety of flight station locations along the longitudinal axis must be known. From these relationships, the structural bending modes can be implemented into piloted simulations. Figure 20 shows the implementation of the structural mode shape into the transfer functions (courtesy of Munger[16]).

Implementation of Active Control

After modeling and simulating the primary structural bending modes, the next stage is to determine a viable method to control the structure. For this purpose, a flexible

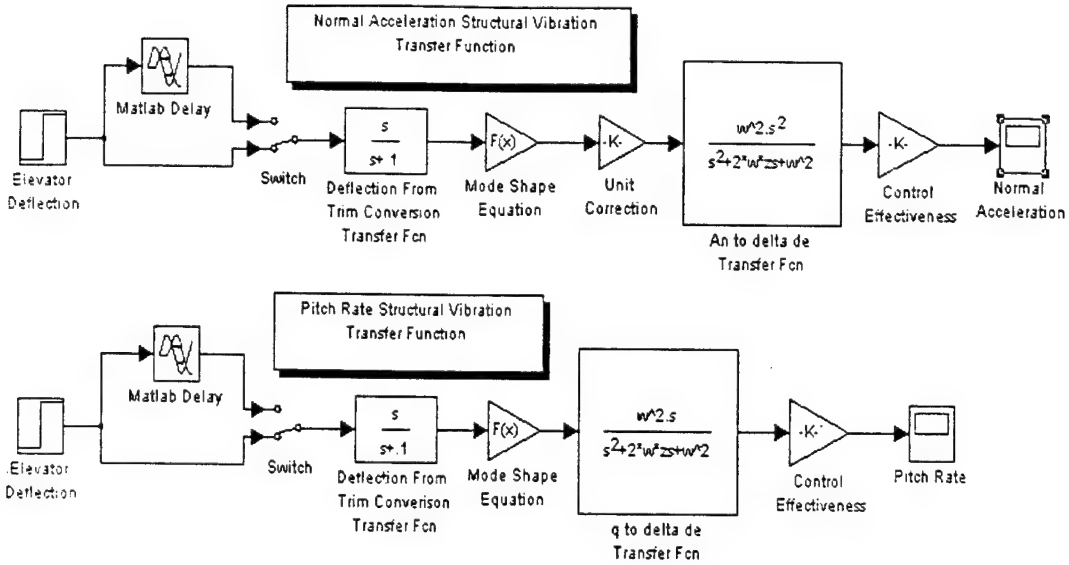

Figure 20. Implementation of structural modes into transfer functions (from AIAA-99-4108[16])

model aircraft approximately 11 feet in length has been constructed to demonstrate the significant structural bending effects of an aircraft in flight. The fuselage of the model aircraft is divided into two parts. Constructed of wood, the first part of the fuselage supports the wings, the batteries, and the motor. The second part of the fuselage is constructed of flexible Aluminum tubing. The model aircraft was constructed in two parts in order to demonstrate the impact of the structural bending modes while still allowing the aircraft to attain flight.

Methods to simulate the bending effects of the wooden fuselage section and the wings (composed of foam core, carbon fiber stiffeners, and fiberglass) as well as the damping effect due to the weight of the batteries and motor are currently being investigated. Once a baseline frequency and mode shape have been established for the model aircraft, the process outlined above can be used to predict the effect of changing the cg location or the weight of the aircraft.

The shape function, which expresses fuselage deflection as a function of fuselage location, can be used to develop transfer functions suitable for flight simulation. Deflections from the dynamic equations that describe this mode shape are added to the rigid body motion to obtain the total deflections of the aircraft structure. The final stage will be to apply active control to damp, isolate, or control vibration. Through the use of sensors to measure vibrations, active control electronics can be used to apply feedback algorithms, and strain actuators to induce "anti-vibrations" to counteract the structural vibrations.

CHAPTER 7

CONCLUDING REMARKS

The frequency and mode shape of the first natural bending mode of ground vibration test data may be modeled by changing both the thickness and the length of the model and by using forces or mass to change the structural bending mode of the FE model. First, the natural frequency can be matched by adjusting the length and then changing the thickness according to a linear relationship. Then, the first structural bending mode can be matched using applied forces to deflect the shape. Altering the thickness, length, and mass of the FE model can approximate the second structural bending mode. However, a more complex matching procedure is required to match the second mode shape since the frequency changes with the addition of mass to the FE model.

REFERENCES

1. Bisplinghoff, R. L., Ashley, H., Halfman, R. L., Aeroelasticity, Addison-Wesley Publishing Company, Inc., 1955.

2. Smith, J. W., Berry, Donald T., "Analysis of Longitudinal Pilot-Induced Oscillation Tendencies of YF-12 Aircraft," NASA TN D-7900, February 1975.

3. Joshi, S. M., Kelkar, A. G., "Inner Loop Control of Supersonic Aircraft in the Presence of Aeroelastic Modes," IEEE Transactions on Control Systems Technology, Vol. 6, No. 6, Nov. 1998, pages 730-739.

4. "F-16s Have This Little Flutter Problem?," Pacific Flyer, April 1999, page A7.

5. Moss, C., Shifflett, S., "B-2A Residual Pitch Oscillation (RPO) Investigation," Sept. 25 1997.

6. Powers, B. G.,"Structural Dynamic Model Obtained from Flight for Use with Piloted Simulation and Handling Qualities Analysis," NASA TM 4747, 1996.

7. Shafer, M.F.,"Low-Order Equivalent Models of Highly Augmented Aircraft Determined from Flight Data," AIAA Journal of Guidance, Control, and Dynamics, Sept 1982.

8. Waszak, M. R., and D. K. Schmidt, "Flight Dynamics of Aeroelastic Vehicles," AIAA Journal of Aircraft, Vol. 25, No. 6, June 1988 , pages 563-571.

9. Newman, B., and D. K. Schmidt, "Numerical and Literal Aeroelastic Vehicle Model Reduction for Feedback Control Synthesis," AIAA Journal of Guidance, Control, and Dynamics, Vol. 14, No. 5, pages 943-953, 1991.

10. Waszak, M. R., Buttrill, C. S., and D. K. Schmidt, "Modeling and Model Simplification of Aeroelastic Vehicles: An Overview," NASA TM 107691, Sept. 1992.

11. Meirovitch, L., "Hybrid State Equations of Motion for Flexible Bodies in Terms of Quasi-Coordinates," AIAA Journal of Guidance, Control, and Dynamics, Vol. 14, No. 5, Sep.-Oct. 1991, pages 1008-1013.

12. Newman, B., and D. K. Schmidt, "Aeroelastic 'Vehicle Multivariable Control Synthesis with Analytical Robustness Evaluation," AIAA Journal of Guidance, Control, and Dynamics, Vol. 17, No. 6, Nov.-Dec. 1994, pages 1145-1153.

13. Livneh, R., and D. K. Schmidt, "Unified Literal Approximations for Longitudinal Dynamics of Flexible Flight Vehicles," AIAA Journal of Guidance, Control, and Dynamics, Vol 18, No. 5, Sept-Oct. 1995, pages 1074-1083.

14. Chavez, F. R., and D. K. Schmidt, "Analytical Aeropropulsive/Aeroelastic Hypersonic-Vehicle Model with Dynamic Analysis," AIAA Journal of Guidance, Control, and Dynamics, Vol. 17, No. 6, Nov-Dec. 1994, pages 1308-1319.

15. Waszak, M. R., Davidson, J. B., and Schmidt, D. K., "A Simulation Study of the Flight Dynamics of Elastic Aircraft," NASA 4102, 1987.

16. Munger, A.R., et al, "Transfer Functions for Simulating the Structural Vibration Modes of Large Aircraft," in Proc. AIAA AFM Conf., Portland, OR., Paper AIAA-99-4108, Aug. 1999.

17. Rowan, J. C., and Burns, T. A., "Aeroelastic Loads Predictions using Finite Element Aerodynamics," Journal of Aircraft, Vol. 12, No. 11, Nov. 1975, pages 890-898.

18. Cunningham, H. J., Batina, J., T., and Bennett, R. M., "Modern Wing Flutter Analysis by Computational Fluid Dynamics Methods," Journal of Aircraft, Vol. 25, No. 10, Oct. 1988, pages 962-967.

19. Anderson, M.R., "Robustness Evaluation of a Flexible Aircraft Control System," AIAA Journal of Guidance, Control, and Dynamics, Vol. 16, No. 3, May-Jun 1993, pages 564-571.

20. Chen, C.W., Huang, J.K., Phan, M., Juang, J.N.,"Integrated System Identification and State Estimation for Control of Flexible Space Structures," AIAA Journal of Guidance, Control, and Dynamics, Vol. 15, No. 1, Jan-Feb 1992, pages 88-95.

21. Choe, K., Baruh, H.,"Actuator Placement in Structural Control," AIAA Journal of Guidance, Control, and Dynamics, Vol. 15, No. 1, Jan-Feb 1992, pages 40-48.

22. Lim, K.B., "Method for Optimal Actuator and Sensor Placement for Large Flexible Structures," AIAA Journal of Guidance, Control, and Dynamics, Vol. 15, No. 1, Jan-Feb 1992, pages 49-57.

23. Gilbert, M. G., Schmidt, D. K.,"Integrated Structure/Control Law Design by Multilevel Optimization," AIAA Journal of Guidance, Control, and Dynamics, Vol. 14, No. 5, Sept.-Oct. 1991, pages 1001-1007.

24. Meirovitch, L., "Hybrid State Equations of Motion for Flexible Bodies in Terms of Quasi-Coordinates," AIAA Journal of Guidance, Control, and Dynamics, Vol. 14, No. 5, Sept.-Oct. 1991, pages 1008-1013.

25. An, J., Yan, M., Zhou, W, Sun, X., Yan, Z, Qiu, C.,"Aircraft Dynamic Response to Variable Wing Sweep Geometry," AIAA Journal of Aircraft, Vol. 25, No. 3, March 1988 , pages 216-221.

26. Lottati, I., "Aeroelastic Tailoring of a Composite Wing with a Decoupler Pylon as a Wing/Store Flutter Suppressor," AIAA Journal of Aircraft, Vol. 25, No. 3, March 1988 , pages 271-280.

27. Karpel, M.,"Efficient Vibration Mode Analysis of Aircraft with Multiple External Store Configurations," AIAA Journal of Aircraft, Vol. 25, No. 8, August 1988 , pages 747-751.

28. Gilbert, M. G., Schmidt, D. K., Weisshaar, T.A.,"Quadratic Synthesis of Integrated Active Controls for an Aeroelastic Forward-Swept-Wing Aircraft," AIAA Journal of Guidance, Control, and Dynamics, Vol. 7, No. 2, Mar-Apr 1984, pages 190-196.

29. Gawronshi, W., Williams, T.,"Model Reduction for Flexible Space Structures," AIAA Journal of Guidance, Control, and Dynamics, Vol. 14, No. 1, Jan-Feb. 1991, pages 68-75.

30. Williams, T.," Closed-Form Grammians and Model Reduction for Flexible Space Structures," IEEE Transactions on Automatic Control, Vol. 35, No. 3, March 1990, pages 379-382.

APPENDIX A

COSMOS/M™ MODELING & SIMULATION PROCEDURE

Problem Setup

The finite element model and its boundary conditions must first be specified.

1. The **SF4CORD** command is used to specify a surface from four coordinates. In this example, the coordinates for the 264 inch model are used.

   Geometry > Surfaces > Draw w/ 4 Coord (**SF4CORD**)
   SF4CORD,1,72,0,0,102,0,0,102,264,0,72,264,0

   This surface creates the fuselage of the model. The thickness of the model is dependent on the natural frequency that must be matched. Using the relationship between frequency and thickness, an appropriate thickness must be determined in order to match a desired frequency. The command line to create another surface a thickness of 0.5 inches away from the first surface follows:

   SF4CORD,2,72,0,.5,102,0,.5,102,264,.5,72,264,.5

2. The VL2SF command is used to create a volume from the two surfaces. This command will automatically create all six surfaces of the volume.

   Geometry > Volume > Draw w/ 2 Surfaces (**VL2SF**)
   VL2SF,1,1,2,1

   The command lines to create the wing and the tail follows:

   SF4CORD,7,102,84,0,174,84,0,174,102,0,102,102,0
   SF4CORD,8,102,84,.5,174,84,.5,174,102,.5,102,102,.5
   VL2SF,2,7,8,1
   SF4CORD,13,0,84,0,72,84,0,72,102,0,0,102,0
   SF4CORD,14,0,84,.5,72,84,.5,72,102,.5,0,102,.5
   VL2SF,3,13,14,1
   SF4CORD,19,102,234,0,138,234,0,138,252,0,102,252,0
   SF4CORD,20,102,234,.5,138,234,.5,138,252,.5,102,252,.5
   VL2SF,4,19,20,1
   SF4CORD,25,36,234,0,72,234,0,72,252,0,36,252,0
   SF4CORD,26,36,234,.5,72,234,.5,72,252,.5,36,252,.5
   VL2SF,5,25,26,1

After all five volumes have been created, the model should resemble the following picture.

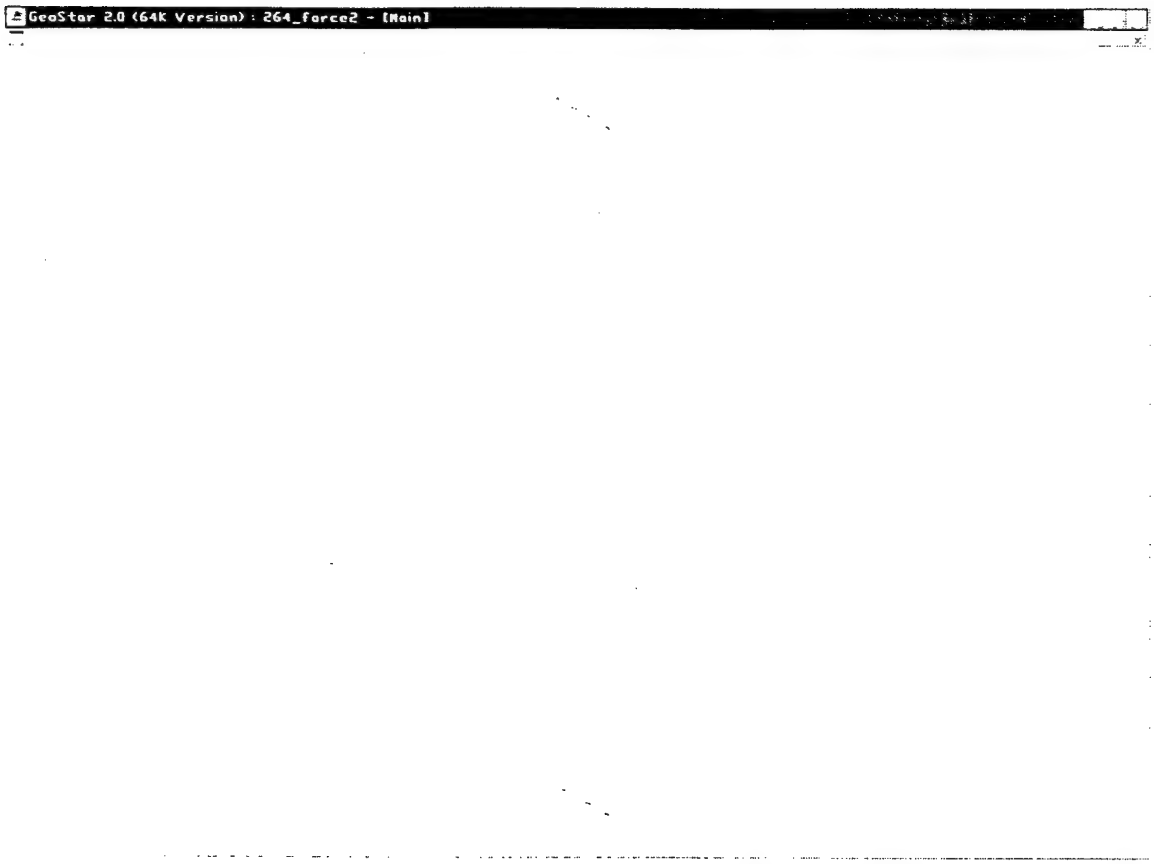

3. Next, the volumes must be specified as a solid element. Using the **EGROUP** command, different types of elements can be designated.

   Propsets > Element Group (**EGROUP**)
   EGROUP,1,
   SOLID;

4. The type of material may be assigned using the **PICK_MAT** command. This command presents the user with a set of pre-determined material properties.

   Propsets > Pick Material (**PICK_MAT**)
   PICK_MAT,1,
   AL_6061,
   FPS

5. The number of elements in the finite element model is determined by the **M_VL** command. For a rectangular element, the number of nodes per element should be designated 8. The number of elements on each curve is chosen to optimize accuracy of the solution and computer performance.

Meshing > Parametric Mesh > Volumes (**M_VL**)
M_VL,1,1,1,8,24,528,1,1,1,1

The wing and the tail can be meshed in a similar fashion. Note that the number of elements on the wing and tail have been chosen so that the nodes on the fuselage correspond to the nodes on the wing and tail.

M_VL,2,3,1,8,36,36,1,1,1,1
M_VL,4,5,1,8,18,36,1,1,1,1

6. The next step is to create the spring that will serve to excite the flat plate model. First, the placement of the spring is defined with two points. In this example, the spring will be placed at the cg location of the flat plate.

   Geometry > Point (**PT**)
   PT,41,87,135,.5
   PT,42,87,135,60.5

7. The line connecting the two points can be created using the command **CRLINE**.

   Geometry > Curves > Curve (**CRLINE**)
   CRLINE,61,41,42

8. The process of specifying the element group must be repeated for the spring.

   Propsets > Element Group (**EGROUP**)
   EGROUP,2,
   SPRING;

9. The **RCONST** command allows different parameters to be specified for each element group. In this case, the stiffness of the spring is designated as 50.0.

   Propsets > Real Constant (**RCONST**)
   RCONST,2,1,1,1,50.0

10. For the spring, the material is specified as alloy steel using the **PICK_MAT** command.

    Propsets > Pick Material (**PICK_MAT**)
    PICK_MAT,2,
    ASTEEL,
    FPS

11. The spring is meshed with the **M_CR** command so that there is one element on the curve.

Meshing > Parametric Mesh > Curves (**M_CR**)
M_CR,61,61,1,2,1,1;

12. The **NMERGE** command causes coinciding nodes to be merged. For large models, the tolerance should be decreased in order to merge nodes that are in close proximity.

    Meshing > Nodes > Merge (**NMERGE**)
    Beginning Node > 1
    Ending Node > 34740
    Increment > 1
    Tolerance > **0.001** Decrease tolerance for larger models
    All/Among flag > 0
    Echo flag > 1
    Low/High flag > 0

13. The **NCOMPRESS** command renumbers the nodes in the specified range without any gaps.

    Meshing > Nodes > Compress (**NCOMPRESS**)
    NCOMPRESS,1,34740

14. The **DPT** command allows the displacement boundary conditions to be specified for all nodes associated with a keypoint.

    The displacement in the x, y, and rotational direction should be restrained at the point that connects the spring with the flat plate.

    LoadsBC > Structural > Displacement > Define by Points (**DPT**)
    Beginning Key point > **41**
    Displacement label > **UX** Restrain the node in the x direction
    Value > 0
    Ending Key point > **41**
    Increment > 1
    Additional Displacement labels if any > **UY,AR** Restrain the node in the y direction and for all rotations

    The point at the other end of the spring should be restrained in all six degrees of freedom.

    DPT,42,AL,0,42,1;

    The **DLIST** command can be used to display the displacements corresponding to the node locations.

    LoadsBC > Structural > Displacement > List (**DLIST**)

DLIST,1,34443,1

Node	Csid	UX TimCr	UY TimCr	UZ TimCr	RX TimCr	RY TimCr	RZ TimCr
19988	0	0.00e+000 0	0.00e+000 0	-	0.00e+000 0	0.00e+000 0	0.00e+000 0
34443	0	0.00e+000 0	0.00e+000 0	0.00e+000 0	0.00e+000 0	0.00e+000 0	0.00e+000 0

Setup of Time History Analysis

Before the analysis can be performed, the analysis and load specifications must be defined.

1. The first step in performing the time history analysis is to specify the type of the analysis using the command **PD_ATYPE**.

   Analysis > Post_Dynamic > Set PD Analysis Type (**PD_ATYPE**)
   Post Dynamic Type > **Modal time history analysis**
   No. of frequency > **10**
   No. of time steps in the solution > **200**
   Starting time [0] > 0
   Time step size [0.1] > **0.005**
   Time integration method > Newmark method
   First integration parameter > 0.5 — Correspond to delta parameter of Newmark method
   Second integration parameter > **0.25** — Correspond to theta parameter of Newmark Method
   Type of response printout > Rel displ and rel vel
   Load case for initial conditions > 0 — No static displacement is considered as initial conditions
   Dead load step > 0
   Dead load multi-factor > 1

2. **PD_PRINT** defines the response printout options.

   Analysis > Post_Dynamic > PD Output > Set Print Options (**PD_PRINT**)
   Displacement print flag > On
   Velocity print flag > Off
   Acceleration print flag > Off
   Phase Angle print flag > Off
   Missing mass correction flag > Off
   Response print interval > 1
   Beginning step for stress print > 1
   Ending step for stress print >
   Increment > 1

3. The **PD_CURTYP** command associates the forces applied to the flat plate to an equation to describe the harmonic function.

   Analysis > Post_Dynamic > PD Curves > Curve Type (**PD_CURTYP**)
   Curve label > 1
   Type of curve > **Harmonic**
   Excitation type > Force/pressure

4. **PD_CURDEF** defines the values for the harmonic curve.

   Analysis > Post_Dynamic > PD Curves > Define Curve (**PD_CURDEF**)
   Curve label > 1
   Start time for harm. Curve > 0
   End time for harm. Curve > **1**
   Amplitude of Sine fn. > **60**
   Frequency of Sine fn. > **20.55** This is the frequency of the first bending mode in rad/sec
   Phase angle of Sine fn. > 0
   Amplitude of Cos fn. > 0
   Frequency of Cos fn. > 0
   Phase angle of Cos fn. > 0
   Constant of exponential fn. > 0

5. The **ACTSET** command allows a particular element attribute, curve, or load case to be activated. In this example, the time curve is activated.

   Control > Activate > Set Entity (**ACTSET**)
   Set label > **TC**
   Time curve label > 1

6. The **FND** command applies a force at a specified node location.

   LoadsBC > Structural > Force > Define Nodes (**FND**)
   Beginning Node > **19988**
   Force label > **FZ** Force to be applied in z direction perpendicular to model
   Value > 1
   Ending Node > **19988**
   Increment > 1

   The following picture is the finished finite element model.

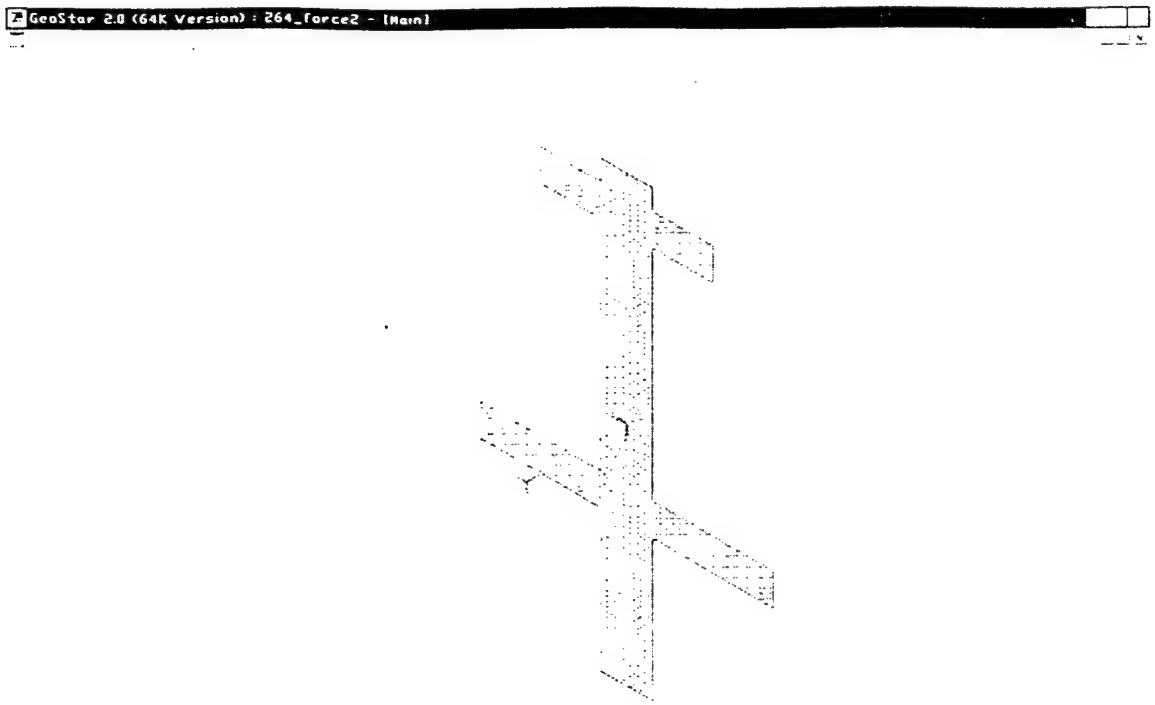

Natural Frequency Analysis

The post dynamic analysis is based on the principle of modal superposition. Therefore, the natural frequencies and the mode shapes of the model must first be extracted using the Frequency Analysis module.

1. The **A_FREQUENCY** command is used to select the various options for the frequency analysis. Specifically, we want to calculate the first 10 modes using the Subspace iteration method.

   Analysis > Frequency/Buckling > Frequency Options (**A_FREQUENCY**)
   A_FREQUENCY > 10,S,16,0,1,0,0,1e-005,1;

2. Run the **R_FREQUENCY** command to initiate the natural frequency analysis.

Post Dynamic Analysis

Now, the model is ready for the post dynamic analysis.

1. Run **R_DYNAMIC** to initiate the post dynamic analysis.

2. After the completion of the post dynamic analysis, the **PD_MAXMIN** command can be executed to search for the maximum and the minimum responses.

   Analysis > Post_Dynamic > PD_Output > List Peak Resp (**PD_MAXMIN**)
   PD_MAXMIN,1,3,10,1,300,0,1

3. Search for the maximum and minimum with **PD_PREPARE**.

   Analysis > Post_Dynamic > Prepare PD Plot (**PD_PREPARE**)
   PD_PREPARE,1

4. Use **PD_MAXLIST** to list the results of the search.

```
PD_MAXLIST
 MAXIMUM  Positive   Displacement     [ Direction 3 ]
 MAXIMUM  Negative   Displacement     [ Direction 3 ]
Type              : Modal Time-History Analysis
Node Range        : [        1,       300]
Time Range        : [  0.000000,  1.000000]
NODE                TIME            VALUE            STEP NO.
  13                 0.8            1.5764                160
  14                 0.8            1.5764                160
  12                 0.8            1.5764                160
  15                 0.8            1.5764                160
  11                 0.8            1.5764                160
  16                 0.8            1.5764                160
  10                 0.8            1.5764                160
   9                 0.8            1.5764                160
  17                 0.8            1.5764                160
   8                 0.8            1.5763                160
Type              : Modal Time-History Analysis
Node Range        : [        1,       300]
Time Range        : [  0.000000,  1.000000]
NODE                TIME            VALUE            STEP NO.
  13                   1            -2.904                200
  12                   1            -2.904                200
  14                   1            -2.904                200
  11                   1           -2.9039                200
  15                   1           -2.9039                200
  16                   1           -2.9039                200
  10                   1           -2.9039                200
   9                   1           -2.9039                200
  17                   1           -2.9039                200
   8                   1           -2.9038                200
```

   At time step 160, the node 13 has the maximum displacement response in the Z direction. At step 200, node 13 has the maximum negative displacement.

5. The **PD_PLOT** command saves the displacement, velocity, acceleration, and deformation information at the specified time steps.

   Analysis > Post_Dynamic > PD_Output > Set Plot Options (**PD_PLOT**)
   PD_PLOT,150,170,1;

6. The **R_DYNAMIC** command repeats the post dynamic analysis saving the detailed information requested by the **PD_PLOT** command.

7. Use **DEFPLOT** to plot the resulting deflection at a particular time step.

Results > Plot > Deformed Shape (**DEFPLOT**)
DEFPLOT,160,1,16561,1;

The resulting deformation of the first mode is plotted below.

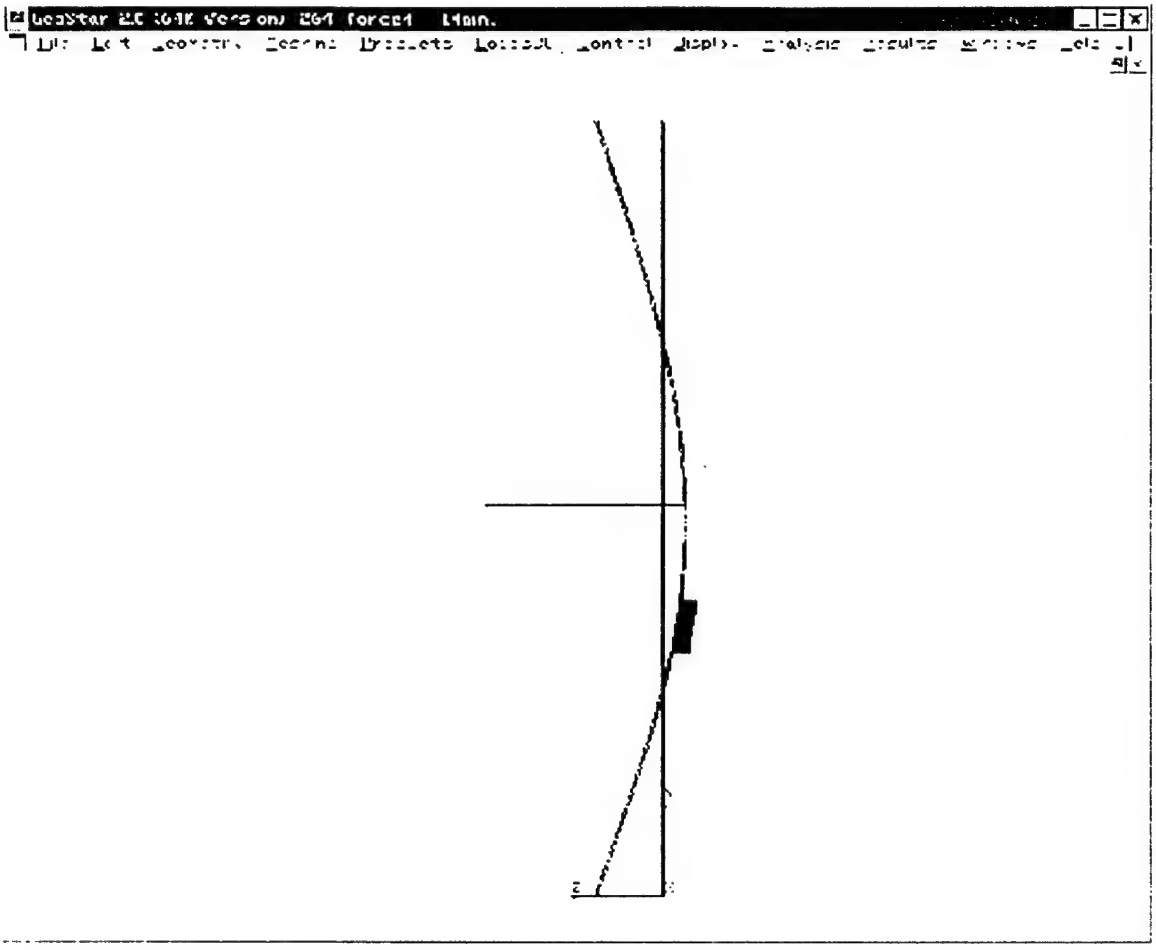

7. DISLIST can be used to list the displacement and rotation.

Results > List > Displacement (**DISLIST**)
Time step number > **160**
Set number > 1
Beginning Node > **13238** List the nodes along the centerline
Ending Node > **26438**
Increment > **25**
Coordinate system > 0

The resulting list can be used to plot the mode shape.

DISLIST,160,1,13238,26438,25,0

Step 160

Node	UX	UY	UZ	RX	RY	RZ
13238	-6.554e-009	1.213e-002	1.576e+000	0.000e+000	0.000e+000	0.000e+000
13263	-6.527e-009	1.213e-002	1.564e+000	0.000e+000	0.000e+000	0.000e+000
13288	-6.499e-009	1.213e-002	1.552e+000	0.000e+000	0.000e+000	0.000e+000
13313	-6.472e-009	1.213e-002	1.540e+000	0.000e+000	0.000e+000	0.000e+000
13338	-6.445e-009	1.213e-002	1.528e+000	0.000e+000	0.000e+000	0.000e+000
13363	-6.418e-009	1.213e-002	1.516e+000	0.000e+000	0.000e+000	0.000e+000
13388	-6.390e-009	1.213e-002	1.504e+000	0.000e+000	0.000e+000	0.000e+000
13413	-6.363e-009	1.213e-002	1.492e+000	0.000e+000	0.000e+000	0.000e+000
13438	-6.336e-009	1.213e-002	1.480e+000	0.000e+000	0.000e+000	0.000e+000
13463	-6.309e-009	1.213e-002	1.468e+000	0.000e+000	0.000e+000	0.000e+000
13488	-6.282e-009	1.213e-002	1.456e+000	0.000e+000	0.000e+000	0.000e+000
13513	-6.255e-009	1.213e-002	1.444e+000	0.000e+000	0.000e+000	0.000e+000
13538	-6.227e-009	1.212e-002	1.432e+000	0.000e+000	0.000e+000	0.000e+000
13563	-6.200e-009	1.212e-002	1.420e+000	0.000e+000	0.000e+000	0.000e+000
13588	-6.174e-009	1.212e-002	1.408e+000	0.000e+000	0.000e+000	0.000e+000
13613	-6.146e-009	1.212e-002	1.397e+000	0.000e+000	0.000e+000	0.000e+000
13638	-6.119e-009	1.212e-002	1.385e+000	0.000e+000	0.000e+000	0.000e+000
13663	-6.092e-009	1.212e-002	1.373e+000	0.000e+000	0.000e+000	0.000e+000
13688	-6.065e-009	1.212e-002	1.361e+000	0.000e+000	0.000e+000	0.000e+000
13713	-6.038e-009	1.211e-002	1.348e+000	0.000e+000	0.000e+000	0.000e+000

8. NLIST can be used to list the coordinates of the nodes. This command will be needed to get the coordinates in order to graph the data.

   Meshing > Nodes > List (**NLIST**)
   NLIST,13238,26438,25;

Data Analysis in Excel

The displacement data can be imported into Excel. Plotting and curve fitting the data yields the mode shape equation.

1. Using the mouse, right click on the top of the DISLIST window and choose the copy option.

2. Open Excel and paste the data into an Excel spreadsheet. Next use the text to columns option under the Data heading to move the data into separate columns. Choose the Delimited option and click "Next." Then choose the Space option and click "Finish."

3. Once the data has been imported into Excel, it can be normalized by dividing the displacement in the z direction by the maximum value and by dividing the y coordinates (from NLIST) by the maximum value.

4. The Excel Chart Wizard can be used to plot the normalized values and to obtain a polynomial curve fit of the data. Then the polynomial equation can be implemented into the transfer functions.

5. If the distribution of the deflection deviates from the GVT data, then the forces should be altered and the process iterated until there is a good match between the mode shapes from the GVT data and from the finite element data.

Matching Changes in CG and Weight

Once a good match between the GVT data and the finite element model has been established, changes in an aircraft configuration can be simulated.

1. A shift in the cg of the aircraft can be modeled by changing the excitation location of the spring as well as the location of the sinusoidal force (using the procedure previously detailed).

2. A change in aircraft weight can be simulated by changing the thickness of the model.

APPENDIX B

MATLAB™ PREDICTION PROGRAM

```
% This program uses a database of FE calculations in order to predict the amount
% of force required to match the GVT data using the COSMOS/M FE model

% Determine the required thickness of the FE model from the frquency of the GVT data
freq=input('Enter frequency in rad/sec > ');
thick=interp1(freq_data,thick_data,freq)

% Define the data for the baseline Ground Vibration Test
max_GVTFS=max(GVT_FSraw);
max_GVTdef=max(GVT_defraw);
GVT_FS=(GVT_FSraw-GVT_FSraw(1))/max_GVTFS;     % normalize GVT fuselage
                                               % station
GVT_def=GVT_defraw/max_GVTdef;       % normalize GVT fuselage deflection

% Define the data from the initial Finite Element model
max_FEFS=max(FE_FSraw);
max_FEdef=max(FE_defraw);
FE_FS=FE_FSraw/max_FEFS;       % normalize FE fuselage station
FE_def=FE_defraw/max_FEdef;    % normalize FE fuselage deflection

figure(1)
plot(GVT_FS,GVT_def,FE_FS,FE_def,'--')
xlabel('Normalized Fuselage Location'),ylabel('Normalized Deflection')
title('GVT vs. FE Mode Shape Comparison')

% Match the deflection at the cg
%
% Normalize the curves
max_cgforce1=max(CG_force1);
cgforce1=CG_force1/max_cgforce1;
max_cgforce2=max(CG_force2);
cgforce2=CG_force2/max_cgforce2;
max_cgforce3=max(CG_force3);
cgforce3=CG_force3/max_cgforce3;
max_cgforce4=max(CG_force4);
cgforce4=CG_force4/max_cgforce4;
max_cgforce5=max(CG_force5);
cgforce5=CG_force5/max_cgforce5;
max_cgforce6=max(CG_force6);
cgforce6=CG_force6/max_cgforce6;

CG_forces=[cgforce1(271);cgforce2(271);cgforce3(271);cgforce4(271);cgforce5(271);cg
force6(271)];
GVT_inta=interp1(GVT_FS,GVT_def,0.51);
CG_int=interp1(CG_forces,forces,GVT_inta);
% Interpolate the deflection along the length of the fuselage for a specified
```

```
% force using a cubic spline
wi=0:.00189393939:1;  % choose resolution for width
wi_transpose=wi';
width_trans=width';
CG_def=[cgforce1 cgforce2 cgforce3 cgforce4 cgforce5 cgforce6];
CG_deftrans=CG_def';
center_intt=interp2(width_trans,forces,CG_deftrans,wi,CG_int,'cubic');
center_int=center_intt';  % transpose the matrix

figure(2)
plot(GVT_FS,GVT_def,FE_FS,center_int,'--')
xlabel('Normalized Fuselage Location'),ylabel('Normalized Deflection')
title('GVT vs. FE Mode Shape Comparison')

x1=interp1(GVT_FS,GVT_def,0.1);
x2=interp1(GVT_FS,GVT_def,0.3);
x3=interp1(GVT_FS,GVT_def,0.5);
x4=interp1(GVT_FS,GVT_def,0.7);
x5=interp1(GVT_FS,GVT_def,0.85);
y1=interp1(FE_FS,center_int,0.1);
y2=interp1(FE_FS,center_int,0.3);
y3=interp1(FE_FS,center_int,0.5);
y4=interp1(FE_FS,center_int,0.7);
y5=interp1(FE_FS,center_int,0.85);
z1=abs(x1-y1);
z2=abs(x2-y2);
z3=abs(x3-y3);
z4=abs(x4-y4);
z5=abs(x5-y5);

if z1<0.075&z2<0.075&z3<0.075&z4<0.075&z5<0.075
  CG_int
  n=4;
  r=1:528;
  subarray_FS=FE_FS(r,:);
  subarray_def=center_int(r,:);
  p=polyfit(subarray_FS,subarray_def,n)
else

% Match the deflection at the tail
tail_pt=max(GVT_FS);  % find the point closest to the tail in the GVT data
GVT_int=interp1(GVT_FS,GVT_def,tail_pt);
FE_int=interp1(FE_FS,FE_def,tail_pt);  % interpolate for the deflection at the point
                                       % where the GVT data end
tail=GVT_int-FE_int;
```

```
max_tailforce1=max(tail_force1);
tailforce1=tail_force1/max_tailforce1;
max_tailforce2=max(tail_force2);
tailforce2=tail_force2/max_tailforce2;
max_tailforce3=max(tail_force3);
tailforce3=tail_force3/max_tailforce3;
max_tailforce4=max(tail_force4);
tailforce4=tail_force4/max_tailforce4;
max_tailforce5=max(tail_force5);
tailforce5=tail_force5/max_tailforce5;
max_tailforce6=max(tail_force6);
tailforce6=tail_force6/max_tailforce6;
max_tailforce7=max(tail_force7);
tailforce7=tail_force7/max_tailforce7;

tail_forces=[tailforce1(529);tailforce2(529);tailforce3(529);tailforce4(529);tailforce5(529
);tailforce6(529);tailforce7(529)];
GVT_int=interp1(GVT_FS,GVT_def,tail_pt);
tail_int=interp1(tail_forces,forces_tail,GVT_int);

% Interpolate the deflection along the length of the fuselage for a specified
% force using a cubic spline
wi=0:.00189393939:1;  % choose resolution for width
wi_transpose=wi';
width_trans=width_tail';
tail_def=[tailforce1 tailforce2 tailforce3 tailforce4 tailforce5 tailforce6 tailforce7];
tail_deftrans=tail_def';
tail_intt=interp2(width_trans,forces_tail,tail_deftrans,wi,tail_int,'cubic');
tailnew_int=tail_intt';  % transpose the matrix

newgraphn=tailnew_int+center_int;
maxnew=max(newgraphn);
newgraph1=newgraphn/maxnew;

figure(3)
plot(GVT_FS,GVT_def,FE_FS,newgraph1,'--')
xlabel('Normalized Fuselage Location'),ylabel('Normalized Deflection')
title('GVT vs. FE Mode Shape Comparison')

x1=interp1(GVT_FS,GVT_def,0.1);
x2=interp1(GVT_FS,GVT_def,0.3);
x3=interp1(GVT_FS,GVT_def,0.5);
x4=interp1(GVT_FS,GVT_def,0.7);
x5=interp1(GVT_FS,GVT_def,0.85);
y1=interp1(FE_FS,center_int,0.1);
y2=interp1(FE_FS,center_int,0.3);
```

```
y3=interp1(FE_FS,center_int,0.5);
y4=interp1(FE_FS,center_int,0.7);
y5=interp1(FE_FS,center_int,0.85);
z1=abs(x1-y1);
z2=abs(x2-y2);
z3=abs(x3-y3);
z4=abs(x4-y4);
z5=abs(x5-y5);

if z1<0.075&z2<0.075&z3<0.075&z4<0.075&z5<0.075
  CG_int=CG_int+2.2
  tail_int
  n=4;
  r=1:528;
  subarray_FS=FE_FS(r,:);
  subarray_def=newgraph1(r,:);
  p=polyfit(subarray_FS,subarray_def,n)
else

% Match the deflection at fore mid-location
fore_pt=GVT_FS(2);  % find the point closest to the mid-section in the GVT data
foreGVT_int=interp1(GVT_FS,GVT_def,fore_pt);
foreFE_int=interp1(FE_FS,FE_def,fore_pt);  % interpolate for the deflection at the fore
                                           % point
fore=foreGVT_int-foreFE_int;

max_foreforce1=max(fore_force1);
foreforce1=fore_force1/max_foreforce1;
max_foreforce2=max(fore_force2);
foreforce2=fore_force2/max_foreforce2;
max_foreforce3=max(fore_force3);
foreforce3=fore_force3/max_foreforce3;
max_foreforce4=max(fore_force4);
foreforce4=fore_force4/max_foreforce4;
max_foreforce5=max(fore_force5);
foreforce5=fore_force5/max_foreforce5;

fore_forces=[foreforce1(20);foreforce2(20);foreforce3(20);foreforce4(20);foreforce5(20)
];
foreGVT_int=interp1(GVT_FS,GVT_def,fore_pt);
fore_int=interp1(fore_forces,forces_fore,foreGVT_int);

% Interpolate the deflection along the length of the fuselage for a specified
% force using a cubic spline
wi=0:.00189393939:1;  % choose resolution for width
wi_transpose=wi';
```

```
width_trans=width_fore';
fore_def=[foreforce1 foreforce2 foreforce3 foreforce4 foreforce5];
fore_deftrans=fore_def';
fore_intt=interp2(width_trans.forces_fore,fore_deftrans,wi.fore_int,'cubic');
forenew_int=fore_intt';  % transpose the matrix

newgraph=tailnew_int+center_int+forenew_int;
maxnew=max(newgraph);
newgraph2=newgraph/maxnew;

figure(4)
plot(GVT_FS,GVT_def,FE_FS,newgraph2,'--')
xlabel('Normalized Fuselage Location'),ylabel('Normalized Deflection')
title('GVT vs. FE Mode Shape Comparison')

x1=interp1(GVT_FS.GVT_def,0.1);
x2=interp1(GVT_FS,GVT_def,0.3);
x3=interp1(GVT_FS,GVT_def,0.5);
x4=interp1(GVT_FS.GVT_def,0.7);
x5=interp1(GVT_FS,GVT_def,0.85);
y1=interp1(FE_FS.center_int,0.1);
y2=interp1(FE_FS.center_int.0.3);
y3=interp1(FE_FS.center_int,0.5);
y4=interp1(FE_FS.center_int.0.7);
y5=interp1(FE_FS.center_int.0.85);
z1=abs(x1-y1);
z2=abs(x2-y2);
z3=abs(x3-y3);
z4=abs(x4-y4);
z5=abs(x5-y5);

if z1<0.075&z2<0.075&z3<0.075&z4<0.075&z5<0.075
  CG_int
  tail_int
  fore_int
  n=4;
  r=1:528;
  subarray_FS=FE_FS(r,:);
  subarray_def=newgraph2(r,:);
  p=polyfit(subarray_FS,subarray_def,n)
end
end
end
```

```
% GVT data for the YF-12

GVT_FSraw=[0.11682243
0.15576324
0.19470405
0.23364486
0.27258567
0.31152648
0.35046729
0.3894081
0.42834891
0.46728972
0.50623053
0.54517134
0.58411215
0.62305296
0.661993769
0.700934579
0.739875389
0.778816199
0.817757009
0.856697819
0.895638629
0.934579439]
```

```
% GVT data for the YF-12

GVT_defraw=[1.055
0.895
0.72
0.56
0.4
0.255
0.135
0.035
-0.058
-0.148
-0.205
-0.245
-0.25
-0.245
-0.24
-0.2
-0.16
-0.11
-0.0475
0.04
0.13
0.215]
```

```
% GVT data for the B-1

GVT_FSraw=[0
100
200
300
400
500
600
700
800
900
1000
1100
1200
1300
1400
1500
1611]/1611
```

```
% GVT data for the B-1

GVT_defraw=[1.00
0.725128
0.444520
0.220083
0.0557356
-0.0556486
-0.123779
-0.152392
-0.149516
-0.12198
-0.0850331
-0.0435321
0.0124225
0.0476976
0.102925
0.182146
0.283587]
```

% FE baseline data

FE_FSraw	21.49999	43.49996	65.49995	87.49992
=[0	21.99999	43.99997	65.99994	87.99993
0.4999951	22.49999	44.49996	66.49995	88.49993
0.9999948	22.99999	44.99997	66.99994	88.99992
1.500005	23.49998	45.49996	67.49994	89.49993
1.999999	23.99999	45.99997	67.99994	89.99992
2.5	24.49998	46.49996	68.49995	90.49991
2.999997	24.99998	46.99997	68.99995	90.99991
3.499996	25.49998	47.49995	69.49995	91.49992
4.000003	25.99998	47.99995	69.99994	91.99992
4.500007	26.49998	48.49996	70.49993	92.49992
4.999999	26.99998	48.99995	70.99995	92.99992
5.500002	27.49998	49.49997	71.49995	93.49992
6.000003	27.99998	49.99997	71.99993	93.99992
6.499993	28.49998	50.49996	72.49994	94.49992
6.999995	28.99998	50.99996	72.99994	94.99992
7.499998	29.49998	51.49996	73.49993	95.49992
8.000008	29.99998	51.99996	73.99994	95.99992
8.499998	30.49998	52.49996	74.49995	96.49991
9.000007	30.99998	52.99996	74.99993	96.99992
9.499992	31.49998	53.49995	75.49993	97.49992
9.999993	31.99998	53.99995	75.99992	97.99991
10.5	32.49997	54.49996	76.49994	98.49992
11	32.99997	54.99995	76.99992	98.99992
11.5	33.49998	55.49995	77.49993	99.49992
12	33.99997	55.99996	77.99994	99.99992
12.5	34.49997	56.49996	78.49993	100.4999
12.99999	34.99997	56.99996	78.99993	100.9999
13.5	35.49997	57.49995	79.49993	101.4999
13.99999	35.99997	57.99995	79.99994	101.9999
14.49999	36.49997	58.49995	80.49992	102.4999
14.99999	36.99998	58.99995	80.99993	102.9999
15.5	37.49998	59.49995	81.49993	103.4999
15.99999	37.99997	59.99996	81.99993	103.9999
16.49999	38.49997	60.49996	82.49992	104.4999
16.99998	38.99997	60.99995	82.99993	104.9999
17.5	39.49997	61.49994	83.49993	105.4999
17.99999	39.99996	61.99994	83.99993	105.9999
18.49998	40.49997	62.49995	84.49993	106.4999
18.99999	40.99997	62.99995	84.99993	106.9999
19.49999	41.49997	63.49995	85.49993	107.4999
20	41.99997	63.99995	85.99992	107.9999
20.49998	42.49997	64.49995	86.49992	108.4999
20.99998	42.99997	64.99994	86.99992	108.9999

109.4999	132.4999	155.4998	178.4998	201.4998
109.9999	132.9999	155.9999	178.9999	201.9998
110.4999	133.4999	156.4999	179.4998	202.4998
110.9999	133.9999	156.9998	179.9998	202.9998
111.4999	134.4999	157.4999	180.4998	203.4998
111.9999	134.9999	157.9999	180.9998	203.9998
112.4999	135.4999	158.4999	181.4998	204.4998
112.9999	135.9999	158.9998	181.9998	204.9998
113.4999	136.4999	159.4999	182.4998	205.4998
113.9999	136.9999	159.9999	182.9998	205.9998
114.4999	137.4999	160.4999	183.4998	206.4998
114.9999	137.9999	160.9998	183.9998	206.9998
115.4999	138.4999	161.4998	184.4998	207.4998
115.9999	138.9999	161.9998	184.9999	207.9998
116.4999	139.4999	162.4999	185.4999	208.4998
116.9999	139.9999	162.9999	185.9998	208.9998
117.4999	140.4999	163.4998	186.4998	209.4998
117.9999	140.9999	163.9999	186.9998	209.9998
118.4999	141.4999	164.4999	187.4998	210.4998
118.9999	141.9999	164.9999	187.9998	210.9998
119.4999	142.4999	165.4999	188.4998	211.4998
119.9999	142.9999	165.9999	188.9998	211.9998
120.4999	143.4999	166.4998	189.4998	212.4998
120.9999	143.9999	166.9999	189.9998	212.9998
121.4999	144.4999	167.4998	190.4998	213.4998
121.9999	144.9999	167.9998	190.9998	213.9998
122.4999	145.4999	168.4999	191.4998	214.4998
122.9999	145.9999	168.9999	191.9998	214.9998
123.4999	146.4999	169.4999	192.4998	215.4998
123.9999	146.9999	169.9998	192.9998	215.9998
124.4999	147.4999	170.4998	193.4998	216.4998
124.9999	147.9999	170.9999	193.9998	216.9998
125.4999	148.4999	171.4998	194.4998	217.4998
125.9999	148.9999	171.9998	194.9998	217.9998
126.4999	149.4999	172.4998	195.4998	218.4998
126.9999	149.9999	172.9998	195.9998	218.9998
127.4999	150.4999	173.4998	196.4998	219.4998
127.9999	150.9999	173.9999	196.9998	219.9998
128.4999	151.4999	174.4998	197.4998	220.4998
128.9999	151.9999	174.9999	197.9998	220.9998
129.4999	152.4999	175.4998	198.4998	221.4998
129.9999	152.9999	175.9998	198.9998	221.9998
130.4999	153.4999	176.4998	199.4998	222.4998
130.9999	153.9999	176.9998	199.9998	222.9998
131.4999	154.4999	177.4998	200.4998	223.4998
131.9999	154.9998	177.9998	200.9998	223.9998

224.4998
224.9998
225.4998
225.9998
226.4998
226.9998
227.4998
227.9998
228.4998
228.9998
229.4998
229.9998
230.4998
230.9998
231.4998
231.9998
232.4998
232.9998
233.4998
233.9998
234.4998
234.9998
235.4998
235.9998
236.4998
236.9998
237.4998
237.9998
238.4998
238.9998
239.4998
239.9998
240.4998
240.9998
241.4998
241.9998
242.4998
242.9998
243.4998
243.9998
244.4998
244.9998
245.4998
245.9998
246.4998
246.9998
247.4998
247.9998
248.4998
248.9998
249.4998
249.9997
250.4998
250.9998
251.4997
251.9998
252.4998
252.9998
253.4998
253.9998
254.4998
254.9998
255.4998
255.9998
256.4998
256.9998
257.4998
257.9998
258.4998
258.9998
259.4998
259.9998
260.4998
260.9998
261.4998
261.9998
262.4998
262.9998
263.4998
263.9998]

% FE baseline data

FE_defraw	7.17E-01	3.71E-01	5.60E-02	-2.00E-01
=[1.06E+0	7.09E-01	3.64E-01	4.94E-02	-2.05E-01
0	7.01E-01	3.56E-01	4.28E-02	-2.10E-01
1.05E+00	6.93E-01	3.48E-01	3.63E-02	-2.15E-01
1.04E+00	6.85E-01	3.41E-01	2.98E-02	-2.20E-01
1.03E+00	6.77E-01	3.33E-01	2.34E-02	-2.25E-01
1.02E+00	6.69E-01	3.26E-01	1.69E-02	-2.30E-01
1.02E+00	6.61E-01	3.18E-01	1.05E-02	-2.34E-01
1.01E+00	6.53E-01	3.11E-01	4.15E-03	-2.39E-01
1.00E+00	6.45E-01	3.03E-01	-2.18E-03	-2.44E-01
9.91E-01	6.37E-01	2.96E-01	-8.48E-03	-2.48E-01
9.83E-01	6.29E-01	2.89E-01	-1.47E-02	-2.53E-01
9.75E-01	6.21E-01	2.81E-01	-2.10E-02	-2.57E-01
9.67E-01	6.13E-01	2.74E-01	-2.72E-02	-2.62E-01
9.59E-01	6.05E-01	2.66E-01	-3.33E-02	-2.66E-01
9.51E-01	5.97E-01	2.59E-01	-3.94E-02	-2.71E-01
9.43E-01	5.89E-01	2.52E-01	-4.55E-02	-2.75E-01
9.35E-01	5.81E-01	2.44E-01	-5.16E-02	-2.80E-01
9.27E-01	5.73E-01	2.37E-01	-5.76E-02	-2.84E-01
9.19E-01	5.65E-01	2.30E-01	-6.36E-02	-2.88E-01
9.11E-01	5.58E-01	2.23E-01	-6.95E-02	-2.92E-01
9.02E-01	5.50E-01	2.15E-01	-7.54E-02	-2.96E-01
8.94E-01	5.42E-01	2.08E-01	-8.13E-02	-3.01E-01
8.86E-01	5.34E-01	2.01E-01	-8.71E-02	-3.05E-01
8.78E-01	5.26E-01	1.94E-01	-9.29E-02	-3.09E-01
8.70E-01	5.18E-01	1.87E-01	-9.86E-02	-3.13E-01
8.62E-01	5.10E-01	1.80E-01	-1.04E-01	-3.17E-01
8.54E-01	5.03E-01	1.72E-01	-1.10E-01	-3.21E-01
8.46E-01	4.95E-01	1.65E-01	-1.16E-01	-3.25E-01
8.38E-01	4.87E-01	1.58E-01	-1.21E-01	-3.28E-01
8.30E-01	4.79E-01	1.51E-01	-1.27E-01	-3.32E-01
8.22E-01	4.71E-01	1.44E-01	-1.32E-01	-3.36E-01
8.14E-01	4.64E-01	1.37E-01	-1.38E-01	-3.40E-01
8.05E-01	4.56E-01	1.30E-01	-1.43E-01	-3.43E-01
7.97E-01	4.48E-01	1.24E-01	-1.49E-01	-3.47E-01
7.89E-01	4.40E-01	1.17E-01	-1.54E-01	-3.50E-01
7.81E-01	4.33E-01	1.10E-01	-1.59E-01	-3.54E-01
7.73E-01	4.25E-01	1.03E-01	-1.65E-01	-3.57E-01
7.65E-01	4.17E-01	9.62E-02	-1.70E-01	-3.61E-01
7.57E-01	4.09E-01	8.94E-02	-1.75E-01	-3.64E-01
7.49E-01	4.02E-01	8.27E-02	-1.80E-01	-3.67E-01
7.41E-01	3.94E-01	7.59E-02	-1.85E-01	-3.71E-01
7.33E-01	3.86E-01	6.93E-02	-1.90E-01	-3.74E-01
7.25E-01	3.79E-01	6.26E-02	-1.95E-01	-3.77E-01

-3.80E-01	-4.68E-01	-4.51E-01	-3.40E-01	-1.51E-01
-3.83E-01	-4.68E-01	-4.50E-01	-3.37E-01	-1.47E-01
-3.86E-01	-4.69E-01	-4.48E-01	-3.33E-01	-1.42E-01
-3.89E-01	-4.70E-01	-4.47E-01	-3.30E-01	-1.37E-01
-3.92E-01	-4.70E-01	-4.45E-01	-3.27E-01	-1.32E-01
-3.95E-01	-4.71E-01	-4.44E-01	-3.23E-01	-1.27E-01
-3.98E-01	-4.71E-01	-4.42E-01	-3.20E-01	-1.22E-01
-4.01E-01	-4.72E-01	-4.40E-01	-3.16E-01	-1.17E-01
-4.03E-01	-4.72E-01	-4.38E-01	-3.12E-01	-1.12E-01
-4.06E-01	-4.72E-01	-4.37E-01	-3.09E-01	-1.07E-01
-4.08E-01	-4.73E-01	-4.35E-01	-3.05E-01	-1.02E-01
-4.11E-01	-4.73E-01	-4.33E-01	-3.01E-01	-9.73E-02
-4.13E-01	-4.73E-01	-4.31E-01	-2.98E-01	-9.23E-02
-4.16E-01	-4.73E-01	-4.29E-01	-2.94E-01	-8.72E-02
-4.18E-01	-4.73E-01	-4.27E-01	-2.90E-01	-8.21E-02
-4.21E-01	-4.73E-01	-4.25E-01	-2.86E-01	-7.70E-02
-4.23E-01	-4.73E-01	-4.23E-01	-2.82E-01	-7.18E-02
-4.25E-01	-4.73E-01	-4.21E-01	-2.78E-01	-6.67E-02
-4.27E-01	-4.73E-01	-4.18E-01	-2.74E-01	-6.15E-02
-4.29E-01	-4.73E-01	-4.16E-01	-2.70E-01	-5.63E-02
-4.32E-01	-4.73E-01	-4.14E-01	-2.66E-01	-5.10E-02
-4.34E-01	-4.73E-01	-4.11E-01	-2.62E-01	-4.58E-02
-4.36E-01	-4.72E-01	-4.09E-01	-2.58E-01	-4.05E-02
-4.37E-01	-4.72E-01	-4.07E-01	-2.54E-01	-3.52E-02
-4.39E-01	-4.72E-01	-4.04E-01	-2.50E-01	-2.99E-02
-4.41E-01	-4.71E-01	-4.02E-01	-2.46E-01	-2.46E-02
-4.43E-01	-4.71E-01	-3.99E-01	-2.42E-01	-1.93E-02
-4.45E-01	-4.70E-01	-3.97E-01	-2.37E-01	-1.39E-02
-4.46E-01	-4.70E-01	-3.94E-01	-2.33E-01	-8.53E-03
-4.48E-01	-4.69E-01	-3.91E-01	-2.29E-01	-3.13E-03
-4.50E-01	-4.68E-01	-3.89E-01	-2.25E-01	2.28E-03
-4.51E-01	-4.68E-01	-3.86E-01	-2.20E-01	7.71E-03
-4.52E-01	-4.67E-01	-3.83E-01	-2.16E-01	1.32E-02
-4.54E-01	-4.66E-01	-3.80E-01	-2.11E-01	1.86E-02
-4.55E-01	-4.65E-01	-3.78E-01	-2.07E-01	2.41E-02
-4.57E-01	-4.64E-01	-3.75E-01	-2.02E-01	2.96E-02
-4.58E-01	-4.63E-01	-3.72E-01	-1.98E-01	3.51E-02
-4.59E-01	-4.62E-01	-3.69E-01	-1.93E-01	4.06E-02
-4.60E-01	-4.61E-01	-3.66E-01	-1.89E-01	4.62E-02
-4.61E-01	-4.60E-01	-3.63E-01	-1.84E-01	5.17E-02
-4.62E-01	-4.59E-01	-3.60E-01	-1.80E-01	5.73E-02
-4.63E-01	-4.58E-01	-3.56E-01	-1.75E-01	6.29E-02
-4.64E-01	-4.57E-01	-3.53E-01	-1.70E-01	6.85E-02
-4.65E-01	-4.55E-01	-3.50E-01	-1.66E-01	7.41E-02
-4.66E-01	-4.54E-01	-3.47E-01	-1.61E-01	7.97E-02
-4.67E-01	-4.53E-01	-3.44E-01	-1.56E-01	8.54E-02

9.10E-02	3.60E-01
9.67E-02	3.66E-01
1.02E-01	3.71E-01
1.08E-01	3.77E-01
1.14E-01	3.83E-01
1.19E-01	3.89E-01
1.25E-01	3.95E-01
1.31E-01	4.01E-01
1.37E-01	4.07E-01
1.42E-01	4.13E-01
1.48E-01	4.19E-01
1.54E-01	4.25E-01
1.60E-01	4.31E-01
1.65E-01	4.37E-01
1.71E-01	4.43E-01
1.77E-01	4.49E-01
1.83E-01	4.55E-01
1.89E-01	4.61E-01
1.95E-01	4.67E-01
2.00E-01	4.73E-01
2.06E-01	4.78E-01
2.12E-01	4.84E-01
2.18E-01	4.90E-01
2.24E-01	4.96E-01
2.30E-01	5.02E-01
2.35E-01	5.08E-01
2.41E-01	5.14E-01
2.47E-01	5.20E-01
2.53E-01	5.26E-01
2.59E-01	5.32E-01
2.65E-01	5.38E-01
2.71E-01	5.44E-01
2.77E-01	5.50E-01
2.83E-01	5.56E-01
2.89E-01	5.62E-01]
2.94E-01	
3.00E-01	
3.06E-01	
3.12E-01	
3.18E-01	
3.24E-01	
3.30E-01	
3.36E-01	
3.42E-01	
3.48E-01	
3.54E-01	

```
% This script contains the data needed to calculate the thickness to achieve a given
frequency

freq_data=[9.27
  10.29
  15.51
  16.85
  20.14
  20.55]

thick_data=[0.4
  0.5
  0.936
  1.03
  1.2523
  1.2791]
```

% Match the deflection at the center

CG_force1	1.145	0.5786	0.06534	-0.3458
=[1.716	1.132	0.5662	0.05467	-0.3536
1.703	1.119	0.5538	0.04406	-0.3614
1.689	1.106	0.5414	0.0335	-0.3691
1.676	1.093	0.5291	0.02299	-0.3768
1.663	1.08	0.5168	0.01254	-0.3844
1.65	1.066	0.5045	0.002152	-0.3919
1.636	1.053	0.4922	-0.008182	-0.3994
1.623	1.04	0.48	-0.01846	-0.4068
1.61	1.027	0.4678	-0.02868	-0.4142
1.596	1.014	0.4556	-0.03884	-0.4214
1.583	1.001	0.4435	-0.04893	-0.4287
1.57	0.9879	0.4314	-0.05897	-0.4358
1.556	0.9748	0.4194	-0.06895	-0.4429
1.543	0.9618	0.4073	-0.07887	-0.4499
1.53	0.9488	0.3953	-0.08872	-0.4568
1.516	0.9358	0.3834	-0.09851	-0.4637
1.503	0.9228	0.3715	-0.1082	-0.4705
1.49	0.9098	0.3596	-0.1179	-0.4773
1.477	0.8968	0.3477	-0.1275	-0.4839
1.463	0.8838	0.3359	-0.137	-0.4906
1.45	0.8709	0.3241	-0.1465	-0.4971
1.437	0.858	0.3124	-0.1559	-0.5036
1.423	0.8451	0.3007	-0.1652	-0.5099
1.41	0.8322	0.2891	-0.1745	-0.5163
1.397	0.8193	0.2774	-0.1837	-0.5225
1.384	0.8065	0.2659	-0.1929	-0.5287
1.37	0.7936	0.2543	-0.2019	-0.5348
1.357	0.7808	0.2428	-0.2109	-0.5408
1.344	0.768	0.2314	-0.2199	-0.5467
1.33	0.7552	0.22	-0.2287	-0.5526
1.317	0.7425	0.2086	-0.2375	-0.5584
1.304	0.7297	0.1973	-0.2463	-0.5641
1.291	0.717	0.1861	-0.2549	-0.5698
1.277	0.7043	0.1748	-0.2635	-0.5753
1.264	0.6916	0.1637	-0.272	-0.5808
1.251	0.679	0.1526	-0.2805	-0.5862
1.238	0.6663	0.1415	-0.2889	-0.5915
1.225	0.6537	0.1304	-0.2972	-0.5967
1.211	0.6412	0.1195	-0.3055	-0.6018
1.198	0.6286	0.1085	-0.3137	-0.6069
1.185	0.6161	0.09766	-0.3218	-0.6119
1.172	0.6036	0.08683	-0.3298	-0.6168
1.159	0.5911	0.07606	-0.3378	-0.6216

-0.6263	-0.754	-0.719	-0.5383	-0.238
-0.631	-0.7549	-0.7166	-0.5329	-0.2304
-0.6355	-0.7557	-0.7141	-0.5275	-0.2227
-0.64	-0.7564	-0.7115	-0.522	-0.2151
-0.6444	-0.7571	-0.7088	-0.5165	-0.2074
-0.6487	-0.7577	-0.7061	-0.5109	-0.1996
-0.6529	-0.7582	-0.7033	-0.5052	-0.1918
-0.657	-0.7587	-0.7005	-0.4995	-0.184
-0.6611	-0.7591	-0.6975	-0.4937	-0.1762
-0.665	-0.7594	-0.6945	-0.4879	-0.1683
-0.6689	-0.7596	-0.6915	-0.482	-0.1603
-0.6727	-0.7598	-0.6883	-0.4761	-0.1524
-0.6764	-0.7598	-0.6851	-0.4701	-0.1444
-0.6801	-0.7598	-0.6819	-0.4641	-0.1364
-0.6836	-0.7598	-0.6785	-0.458	-0.1283
-0.6871	-0.7596	-0.6751	-0.4519	-0.1202
-0.6904	-0.7594	-0.6717	-0.4457	-0.1121
-0.6937	-0.7591	-0.6681	-0.4395	-0.1039
-0.697	-0.7588	-0.6645	-0.4332	-0.09572
-0.7001	-0.7583	-0.6609	-0.4268	-0.0875
-0.7031	-0.7578	-0.6571	-0.4204	-0.07924
-0.7061	-0.7572	-0.6534	-0.414	-0.07096
-0.709	-0.7566	-0.6495	-0.4075	-0.06265
-0.7118	-0.7558	-0.6456	-0.401	-0.0543
-0.7145	-0.755	-0.6416	-0.3944	-0.04593
-0.7171	-0.7541	-0.6375	-0.3877	-0.03753
-0.7197	-0.7532	-0.6334	-0.3811	-0.02911
-0.7221	-0.7522	-0.6293	-0.3743	-0.02065
-0.7245	-0.7511	-0.625	-0.3675	-0.01217
-0.7268	-0.7499	-0.6207	-0.3607	-0.00366
-0.7291	-0.7487	-0.6164	-0.3538	0.004875
-0.7312	-0.7473	-0.6119	-0.3469	0.01344
-0.7333	-0.746	-0.6074	-0.34	0.02202
-0.7353	-0.7445	-0.6029	-0.333	0.03063
-0.7372	-0.743	-0.5983	-0.3259	0.03927
-0.739	-0.7414	-0.5936	-0.3188	0.04793
-0.7408	-0.7397	-0.5889	-0.3117	0.05661
-0.7424	-0.7379	-0.5841	-0.3045	0.06531
-0.744	-0.7361	-0.5792	-0.2973	0.07404
-0.7456	-0.7342	-0.5743	-0.29	0.08279
-0.747	-0.7323	-0.5694	-0.2827	0.09156
-0.7483	-0.7302	-0.5643	-0.2753	0.1004
-0.7496	-0.7281	-0.5592	-0.2679	0.1092
-0.7508	-0.726	-0.5541	-0.2605	0.118
-0.752	-0.7237	-0.5489	-0.253	0.1269
-0.753	-0.7214	-0.5436	-0.2455	0.1357

0.1446	0.5666	1.68	1.066	0.4799
0.1535	0.5759	1.667	1.052	0.4678
0.1625	0.5852	1.653	1.039	0.4558
0.1714	0.5946	1.64	1.026	0.4437
0.1804	0.6039	1.626	1.013	0.4318
0.1893	0.6132	1.613	0.9998	0.4198
0.1983	0.6225	1.599	0.9867	0.4079
0.2074	0.6319	1.586	0.9736	0.3961
0.2164	0.6412	1.573	0.9605	0.3843
0.2254	0.6505	1.559	0.9474	0.3725
0.2345	0.6598	1.546	0.9344	0.3607
0.2435	0.6692	1.532	0.9214	0.3491
0.2526	0.6785	1.519	0.9084	0.3374
0.2617	0.6878	1.505	0.8954	0.3258
0.2708	0.6971	1.492	0.8824	0.3142
0.2799	0.7065	1.479	0.8694	0.3027
0.2891	0.7158	1.465	0.8565	0.2912
0.2982	0.7251	1.452	0.8436	0.2798
0.3074	0.7345	1.438	0.8307	0.2684
0.3165	0.7438	1.425	0.8178	0.2571
0.3257	0.7531	1.412	0.805	0.2458
0.3349	0.7624	1.398	0.7921	0.2345
0.3441	0.7718	1.385	0.7793	0.2233
0.3533	0.7811	1.371	0.7665	0.2122
0.3625	0.7904	1.358	0.7538	0.2011
0.3717	0.7997	1.345	0.741	0.1901
0.381	0.8091	1.331	0.7283	0.1791
0.3902	0.8184	1.318	0.7156	0.1681
0.3994	0.8277	1.305	0.703	0.1572
0.4087	0.837	1.291	0.6903	0.1464
0.4179	0.8464	1.278	0.6777	0.1356
0.4272	0.8557	1.265	0.6651	0.1249
0.4365	0.865	1.251	0.6526	0.1142
0.4457	0.8743]	1.238	0.64	0.1036
0.455		1.225	0.6275	0.09303
0.4643	CG_force2	1.211	0.615	0.08252
0.4736	=[1.815	1.198	0.6026	0.07208
0.4829	1.801	1.185	0.5902	0.06169
0.4921	1.788	1.171	0.5778	0.05136
0.5014	1.774	1.158	0.5654	0.04109
0.5107	1.761	1.145	0.5531	0.03088
0.52	1.747	1.132	0.5408	0.02073
0.5294	1.734	1.118	0.5286	0.01065
0.5387	1.721	1.105	0.5164	0.0006219
0.548	1.707	1.092	0.5042	-0.00934
0.5573	1.694	1.079	0.492	-0.01924

-0.02907	-0.4092	-0.6347	-0.6874	-0.5827
-0.03884	-0.4159	-0.6377	-0.6867	-0.5788
-0.04855	-0.4225	-0.6405	-0.686	-0.5748
-0.05819	-0.4291	-0.6433	-0.6852	-0.5708
-0.06776	-0.4356	-0.646	-0.6843	-0.5667
-0.07727	-0.442	-0.6486	-0.6833	-0.5626
-0.08671	-0.4483	-0.6511	-0.6823	-0.5583
-0.09609	-0.4546	-0.6536	-0.6812	-0.5541
-0.1054	-0.4607	-0.6559	-0.68	-0.5497
-0.1146	-0.4669	-0.6582	-0.6788	-0.5453
-0.1238	-0.4729	-0.6604	-0.6775	-0.5408
-0.1329	-0.4788	-0.6625	-0.6761	-0.5363
-0.1419	-0.4847	-0.6645	-0.6746	-0.5317
-0.1509	-0.4905	-0.6665	-0.6731	-0.527
-0.1598	-0.4962	-0.6684	-0.6715	-0.5223
-0.1686	-0.5018	-0.6702	-0.6698	-0.5175
-0.1774	-0.5074	-0.6719	-0.668	-0.5127
-0.1861	-0.5129	-0.6735	-0.6662	-0.5078
-0.1947	-0.5182	-0.6751	-0.6643	-0.5028
-0.2033	-0.5235	-0.6765	-0.6623	-0.4978
-0.2118	-0.5288	-0.6779	-0.6603	-0.4927
-0.2202	-0.5339	-0.6792	-0.6582	-0.4876
-0.2286	-0.539	-0.6805	-0.656	-0.4824
-0.2368	-0.5439	-0.6816	-0.6537	-0.4771
-0.2451	-0.5488	-0.6827	-0.6514	-0.4718
-0.2532	-0.5536	-0.6837	-0.649	-0.4664
-0.2613	-0.5583	-0.6847	-0.6465	-0.461
-0.2693	-0.5629	-0.6855	-0.644	-0.4555
-0.2773	-0.5675	-0.6863	-0.6414	-0.4499
-0.2852	-0.5719	-0.687	-0.6387	-0.4443
-0.293	-0.5763	-0.6876	-0.636	-0.4387
-0.3008	-0.5806	-0.6881	-0.6331	-0.4329
-0.3084	-0.5848	-0.6886	-0.6303	-0.4272
-0.3161	-0.5889	-0.689	-0.6273	-0.4213
-0.3236	-0.593	-0.6893	-0.6243	-0.4154
-0.3311	-0.5969	-0.6896	-0.6212	-0.4095
-0.3386	-0.6008	-0.6898	-0.618	-0.4035
-0.3459	-0.6045	-0.6899	-0.6148	-0.3975
-0.3532	-0.6082	-0.6899	-0.6115	-0.3913
-0.3605	-0.6118	-0.6898	-0.6081	-0.3852
-0.3676	-0.6154	-0.6897	-0.6047	-0.379
-0.3747	-0.6188	-0.6895	-0.6012	-0.3727
-0.3818	-0.6222	-0.6892	-0.5976	-0.3664
-0.3887	-0.6254	-0.6889	-0.594	-0.36
-0.3956	-0.6286	-0.6884	-0.5903	-0.3536
-0.4025	-0.6317	-0.6879	-0.5865	-0.3472

-0.3406	0.006638	0.4179	0.8512	1.492
-0.3341	0.01506	0.4272	0.8606	1.479
-0.3275	0.02351	0.4365	0.8701	1.465
-0.3208	0.03199	0.4458	0.8796	1.452
-0.3141	0.04049	0.4552	0.889	1.438
-0.3073	0.04903	0.4645	0.8985	1.425
-0.3005	0.0576	0.4739	0.9079	1.411
-0.2936	0.06619	0.4833	0.9174	1.398
-0.2867	0.07481	0.4926	0.9268	1.384
-0.2798	0.08345	0.502	0.9363	1.371
-0.2728	0.09212	0.5114	0.9457	1.357
-0.2657	0.1008	0.5208	0.9552	1.344
-0.2586	0.1095	0.5302	0.9646]	1.33
-0.2515	0.1183	0.5396		1.317
-0.2443	0.1271	0.549	CG_force3	1.303
-0.2371	0.1359	0.5584	=[1.913	1.29
-0.2298	0.1447	0.5678	1.9	1.277
-0.2225	0.1535	0.5772	1.886	1.263
-0.2151	0.1624	0.5866	1.873	1.25
-0.2077	0.1713	0.5961	1.859	1.236
-0.2003	0.1802	0.6055	1.845	1.223
-0.1928	0.1891	0.6149	1.832	1.21
-0.1853	0.1981	0.6244	1.818	1.196
-0.1777	0.207	0.6338	1.805	1.183
-0.1701	0.216	0.6432	1.791	1.17
-0.1625	0.225	0.6527	1.777	1.156
-0.1548	0.2341	0.6621	1.764	1.143
-0.1471	0.2431	0.6716	1.75	1.13
-0.1393	0.2522	0.681	1.737	1.116
-0.1315	0.2613	0.6905	1.723	1.103
-0.1236	0.2703	0.6999	1.709	1.09
-0.1158	0.2795	0.7094	1.696	1.077
-0.1078	0.2886	0.7188	1.682	1.063
-0.09989	0.2977	0.7283	1.669	1.05
-0.0919	0.3069	0.7377	1.655	1.037
-0.08388	0.3161	0.7472	1.641	1.024
-0.07582	0.3253	0.7566	1.628	1.011
-0.06772	0.3345	0.7661	1.614	0.9974
-0.05959	0.3437	0.7756	1.601	0.9843
-0.05143	0.3529	0.785	1.587	0.9712
-0.04323	0.3622	0.7945	1.574	0.9581
-0.035	0.3714	0.8039	1.56	0.945
-0.02673	0.3807	0.8134	1.547	0.9319
-0.01844	0.39	0.8228	1.533	0.9189
-0.01011	0.3992	0.8323	1.519	0.9059
-0.001752	0.4085	0.8417	1.506	0.8929

0.8799	0.3165	-0.1432	-0.4609	-0.6089
0.867	0.3052	-0.1516	-0.466	-0.6101
0.8541	0.2939	-0.16	-0.4711	-0.6113
0.8412	0.2827	-0.1683	-0.476	-0.6124
0.8283	0.2716	-0.1766	-0.4809	-0.6135
0.8155	0.2605	-0.1848	-0.4857	-0.6144
0.8026	0.2494	-0.1929	-0.4904	-0.6153
0.7898	0.2384	-0.2009	-0.495	-0.6161
0.7771	0.2274	-0.2089	-0.4995	-0.6168
0.7643	0.2165	-0.2168	-0.504	-0.6175
0.7516	0.2057	-0.2247	-0.5083	-0.6181
0.7389	0.1949	-0.2325	-0.5126	-0.6186
0.7262	0.1842	-0.2402	-0.5168	-0.619
0.7136	0.1735	-0.2478	-0.5209	-0.6193
0.701	0.1629	-0.2554	-0.5249	-0.6196
0.6884	0.1523	-0.263	-0.5288	-0.6198
0.6759	0.1418	-0.2704	-0.5326	-0.6199
0.6634	0.1314	-0.2778	-0.5364	-0.6199
0.6509	0.121	-0.2851	-0.5401	-0.6199
0.6384	0.1107	-0.2924	-0.5437	-0.6198
0.626	0.1004	-0.2996	-0.5472	-0.6196
0.6136	0.09024	-0.3067	-0.5506	-0.6193
0.6013	0.08011	-0.3138	-0.5539	-0.619
0.589	0.07004	-0.3208	-0.5571	-0.6185
0.5767	0.06003	-0.3277	-0.5603	-0.6181
0.5644	0.05009	-0.3345	-0.5634	-0.6175
0.5522	0.04021	-0.3413	-0.5664	-0.6168
0.5401	0.0304	-0.348	-0.5693	-0.6161
0.5279	0.02066	-0.3546	-0.5721	-0.6153
0.5158	0.01098	-0.3612	-0.5748	-0.6144
0.5038	0.001363	-0.3677	-0.5775	-0.6135
0.4917	-0.008183	-0.3741	-0.5801	-0.6125
0.4798	-0.01766	-0.3804	-0.5826	-0.6114
0.4678	-0.02707	-0.3867	-0.585	-0.6102
0.4559	-0.03642	-0.3929	-0.5873	-0.6089
0.4441	-0.04569	-0.399	-0.5895	-0.6076
0.4322	-0.0549	-0.405	-0.5917	-0.6062
0.4205	-0.06403	-0.411	-0.5938	-0.6047
0.4087	-0.0731	-0.4169	-0.5958	-0.6032
0.397	-0.0821	-0.4227	-0.5977	-0.6016
0.3854	-0.09103	-0.4284	-0.5995	-0.5999
0.3738	-0.0999	-0.434	-0.6013	-0.5981
0.3623	-0.1087	-0.4395	-0.603	-0.5963
0.3507	-0.1174	-0.445	-0.6046	-0.5944
0.3393	-0.1261	-0.4504	-0.6061	-0.5924
0.3279	-0.1347	-0.4557	-0.6075	-0.5903

-0.5882	-0.4159	-0.1177	0.2691	0.7005
-0.586	-0.4106	-0.1101	0.2781	0.7101
-0.5837	-0.4053	-0.1024	0.2872	0.7196
-0.5814	-0.3999	-0.09473	0.2963	0.7292
-0.579	-0.3945	-0.08698	0.3054	0.7388
-0.5765	-0.389	-0.0792	0.3146	0.7484
-0.5739	-0.3835	-0.07138	0.3238	0.7579
-0.5713	-0.3778	-0.06352	0.3329	0.7675
-0.5686	-0.3722	-0.05562	0.3421	0.7771
-0.5658	-0.3664	-0.04768	0.3514	0.7866
-0.563	-0.3607	-0.0397	0.3606	0.7962
-0.56	-0.3548	-0.03168	0.3698	0.8058
-0.5571	-0.3489	-0.02363	0.3791	0.8154
-0.554	-0.343	-0.01554	0.3884	0.825
-0.5509	-0.337	-0.007417	0.3977	0.8345
-0.5477	-0.3309	0.0007448	0.407	0.8441
-0.5444	-0.3248	0.008942	0.4163	0.8537
-0.5411	-0.3186	0.01717	0.4257	0.8633
-0.5377	-0.3124	0.02544	0.435	0.8729
-0.5342	-0.3061	0.03374	0.4444	0.8825
-0.5307	-0.2998	0.04208	0.4538	0.892
-0.5271	-0.2934	0.05044	0.4631	0.9016
-0.5234	-0.2869	0.05884	0.4725	0.9112
-0.5197	-0.2804	0.06728	0.482	0.9208
-0.5159	-0.2739	0.07574	0.4914	0.9304
-0.512	-0.2673	0.08424	0.5008	0.9399
-0.5081	-0.2607	0.09276	0.5102	0.9495
-0.5041	-0.254	0.1013	0.5197	0.9591
-0.5	-0.2472	0.1099	0.5292	0.9687
-0.4959	-0.2404	0.1185	0.5386	0.9783
-0.4917	-0.2336	0.1272	0.5481	0.9878
-0.4874	-0.2267	0.1358	0.5576	0.9974
-0.4831	-0.2197	0.1445	0.5671	1.007
-0.4787	-0.2128	0.1533	0.5766	1.017
-0.4743	-0.2057	0.162	0.5861	1.026
-0.4697	-0.1986	0.1708	0.5956	1.036
-0.4652	-0.1915	0.1796	0.6051	1.045
-0.4605	-0.1843	0.1885	0.6146	1.055]
-0.4558	-0.1771	0.1973	0.6242	
-0.451	-0.1698	0.2062	0.6337	CG_force4
-0.4462	-0.1625	0.2151	0.6432	=[2.012
-0.4413	-0.1552	0.224	0.6528	1.998
-0.4363	-0.1478	0.233	0.6623	1.984
-0.4313	-0.1403	0.242	0.6719	1.971
-0.4262	-0.1328	0.251	0.6814	1.957
-0.4211	-0.1253	0.26	0.691	1.943

1.929	1.301	0.6987	0.1698	-0.2316
1.916	1.287	0.6862	0.1596	-0.2388
1.902	1.274	0.6738	0.1494	-0.2459
1.888	1.26	0.6614	0.1393	-0.2529
1.875	1.247	0.649	0.1293	-0.2598
1.861	1.233	0.6367	0.1193	-0.2667
1.847	1.22	0.6244	0.1094	-0.2735
1.833	1.207	0.6121	0.0995	-0.2802
1.82	1.193	0.5999	0.08972	-0.2868
1.806	1.18	0.5877	0.08	-0.2934
1.792	1.166	0.5755	0.07035	-0.2999
1.778	1.153	0.5634	0.06076	-0.3063
1.765	1.14	0.5514	0.05125	-0.3127
1.751	1.126	0.5393	0.0418	-0.3189
1.737	1.113	0.5274	0.03243	-0.3251
1.724	1.1	0.5154	0.02312	-0.3313
1.71	1.086	0.5035	0.01388	-0.3373
1.696	1.073	0.4917	0.004709	-0.3432
1.682	1.06	0.4799	-0.004392	-0.3491
1.669	1.047	0.4681	-0.01342	-0.3549
1.655	1.033	0.4564	-0.02239	-0.3606
1.641	1.02	0.4447	-0.03128	-0.3662
1.628	1.007	0.4331	-0.0401	-0.3718
1.614	0.994	0.4215	-0.04886	-0.3772
1.6	0.9809	0.41	-0.05754	-0.3826
1.587	0.9678	0.3985	-0.06616	-0.3879
1.573	0.9547	0.3871	-0.07471	-0.3931
1.559	0.9416	0.3757	-0.08319	-0.3982
1.546	0.9286	0.3644	-0.09161	-0.4032
1.532	0.9156	0.3531	-0.09995	-0.4082
1.518	0.9026	0.3419	-0.1082	-0.413
1.505	0.8897	0.3307	-0.1164	-0.4178
1.491	0.8767	0.3196	-0.1246	-0.4225
1.477	0.8638	0.3085	-0.1327	-0.4271
1.464	0.8509	0.2975	-0.1407	-0.4316
1.45	0.8381	0.2865	-0.1486	-0.436
1.436	0.8253	0.2756	-0.1565	-0.4404
1.423	0.8125	0.2648	-0.1643	-0.4446
1.409	0.7997	0.254	-0.1721	-0.4488
1.396	0.787	0.2433	-0.1797	-0.4529
1.382	0.7743	0.2326	-0.1874	-0.4568
1.369	0.7616	0.222	-0.1949	-0.4607
1.355	0.749	0.2114	-0.2024	-0.4646
1.341	0.7363	0.2009	-0.2098	-0.4683
1.328	0.7238	0.1905	-0.2172	-0.4719
1.314	0.7112	0.1801	-0.2244	-0.4755

-0.479	-0.5494	-0.4566	-0.2203	0.1276
-0.4824	-0.5491	-0.4529	-0.2138	0.1361
-0.4857	-0.5487	-0.4491	-0.2072	0.1447
-0.4889	-0.5482	-0.4453	-0.2006	0.1532
-0.492	-0.5476	-0.4414	-0.194	0.1618
-0.4951	-0.547	-0.4374	-0.1872	0.1705
-0.498	-0.5462	-0.4334	-0.1805	0.1791
-0.5009	-0.5455	-0.4293	-0.1736	0.1878
-0.5037	-0.5446	-0.4251	-0.1668	0.1966
-0.5064	-0.5436	-0.4208	-0.1598	0.2053
-0.509	-0.5426	-0.4165	-0.1529	0.2141
-0.5116	-0.5415	-0.4122	-0.1458	0.2229
-0.514	-0.5403	-0.4077	-0.1388	0.2317
-0.5164	-0.5391	-0.4032	-0.1316	0.2406
-0.5187	-0.5378	-0.3987	-0.1245	0.2495
-0.5209	-0.5363	-0.394	-0.1173	0.2584
-0.523	-0.5349	-0.3893	-0.11	0.2674
-0.5251	-0.5333	-0.3846	-0.1027	0.2763
-0.527	-0.5317	-0.3797	-0.09534	0.2853
-0.5289	-0.53	-0.3749	-0.08794	0.2944
-0.5307	-0.5282	-0.3699	-0.08049	0.3034
-0.5324	-0.5264	-0.3649	-0.073	0.3125
-0.5341	-0.5244	-0.3598	-0.06546	0.3216
-0.5356	-0.5224	-0.3547	-0.05788	0.3307
-0.5371	-0.5204	-0.3495	-0.05026	0.3398
-0.5385	-0.5182	-0.3442	-0.04259	0.349
-0.5398	-0.516	-0.3389	-0.03488	0.3582
-0.541	-0.5137	-0.3335	-0.02713	0.3674
-0.5421	-0.5114	-0.3281	-0.01933	0.3766
-0.5432	-0.5089	-0.3226	-0.0115	0.3859
-0.5442	-0.5064	-0.317	-0.003621	0.3951
-0.5451	-0.5038	-0.3114	0.004297	0.4044
-0.5459	-0.5012	-0.3057	0.01225	0.4137
-0.5467	-0.4984	-0.3	0.02025	0.423
-0.5474	-0.4957	-0.2942	0.02829	0.4324
-0.548	-0.4928	-0.2884	0.03636	0.4417
-0.5485	-0.4898	-0.2825	0.04448	0.4511
-0.5489	-0.4868	-0.2765	0.05263	0.4605
-0.5493	-0.4838	-0.2705	0.06082	0.4699
-0.5496	-0.4806	-0.2644	0.06904	0.4793
-0.5498	-0.4774	-0.2583	0.0773	0.4887
-0.5499	-0.4741	-0.2521	0.0856	0.4982
-0.55	-0.4707	-0.2458	0.09394	0.5076
-0.5499	-0.4673	-0.2395	0.1023	0.5171
-0.5498	-0.4638	-0.2332	0.1107	0.5266
-0.5497	-0.4602	-0.2268	0.1191	0.5361

0.5456	0.9899	1.736	1.109	0.5272
0.5551	0.9996	1.722	1.095	0.5154
0.5647	1.009	1.708	1.082	0.5037
0.5742	1.019	1.695	1.069	0.4921
0.5838	1.029	1.681	1.056	0.4805
0.5933	1.038	1.667	1.042	0.4689
0.6029	1.048	1.653	1.029	0.4574
0.6125	1.058	1.639	1.016	0.446
0.6221	1.068	1.626	1.003	0.4346
0.6317	1.077	1.612	0.9898	0.4232
0.6413	1.087	1.598	0.9767	0.412
0.6509	1.097	1.584	0.9636	0.4007
0.6605	1.106	1.57	0.9506	0.3895
0.6701	1.116	1.557	0.9376	0.3784
0.6798	1.126	1.543	0.9246	0.3673
0.6894	1.135	1.529	0.9116	0.3563
0.6991	1.145]	1.515	0.8987	0.3454
0.7087		1.502	0.8858	0.3345
0.7184	CG_force5	1.488	0.8729	0.3236
0.728	=[2.11	1.474	0.8601	0.3128
0.7377	2.097	1.46	0.8473	0.3021
0.7474	2.083	1.447	0.8345	0.2915
0.7571	2.069	1.433	0.8218	0.2809
0.7667	2.055	1.419	0.8091	0.2703
0.7764	2.041	1.406	0.7964	0.2598
0.7861	2.027	1.392	0.7838	0.2494
0.7958	2.013	1.378	0.7712	0.2391
0.8055	1.999	1.365	0.7586	0.2288
0.8152	1.986	1.351	0.746	0.2186
0.8249	1.972	1.338	0.7335	0.2084
0.8346	1.958	1.324	0.7211	0.1983
0.8443	1.944	1.31	0.7087	0.1883
0.854	1.93	1.297	0.6963	0.1783
0.8637	1.916	1.283	0.6839	0.1685
0.8734	1.902	1.27	0.6716	0.1586
0.8831	1.888	1.256	0.6593	0.1489
0.8928	1.875	1.243	0.6471	0.1392
0.9025	1.861	1.229	0.6349	0.1296
0.9122	1.847	1.216	0.6228	0.12
0.9219	1.833	1.202	0.6107	0.1105
0.9316	1.819	1.189	0.5986	0.1011
0.9413	1.805	1.175	0.5866	0.09179
0.951	1.791	1.162	0.5746	0.08252
0.9607	1.778	1.149	0.5627	0.07332
0.9705	1.764	1.135	0.5508	0.06419
0.9802	1.75	1.122	0.539	0.05512

0.04613	-0.2929	-0.4619	-0.4564	-0.2934
0.03721	-0.2985	-0.4636	-0.4545	-0.2883
0.02836	-0.3041	-0.4651	-0.4525	-0.2831
0.01957	-0.3095	-0.4667	-0.4504	-0.2779
0.01086	-0.3149	-0.4681	-0.4483	-0.2726
0.002208	-0.3202	-0.4694	-0.446	-0.2672
-0.00637	-0.3253	-0.4707	-0.4437	-0.2618
-0.01488	-0.3304	-0.4719	-0.4413	-0.2563
-0.02332	-0.3355	-0.473	-0.4389	-0.2507
-0.0317	-0.3404	-0.474	-0.4363	-0.2451
-0.04	-0.3452	-0.4749	-0.4337	-0.2394
-0.04824	-0.35	-0.4758	-0.4311	-0.2337
-0.05641	-0.3547	-0.4766	-0.4283	-0.2279
-0.06452	-0.3592	-0.4773	-0.4255	-0.222
-0.07256	-0.3637	-0.4779	-0.4226	-0.2161
-0.08053	-0.3681	-0.4784	-0.4196	-0.2101
-0.08844	-0.3725	-0.4789	-0.4166	-0.2041
-0.09628	-0.3767	-0.4793	-0.4135	-0.198
-0.104	-0.3808	-0.4796	-0.4103	-0.1919
-0.1118	-0.3849	-0.4798	-0.4071	-0.1857
-0.1194	-0.3889	-0.4799	-0.4037	-0.1794
-0.127	-0.3927	-0.48	-0.4004	-0.1731
-0.1345	-0.3965	-0.48	-0.3969	-0.1667
-0.1419	-0.4002	-0.4799	-0.3934	-0.1603
-0.1493	-0.4039	-0.4798	-0.3898	-0.1538
-0.1566	-0.4074	-0.4795	-0.3861	-0.1473
-0.1638	-0.4108	-0.4792	-0.3824	-0.1407
-0.171	-0.4142	-0.4788	-0.3785	-0.134
-0.1781	-0.4175	-0.4783	-0.3747	-0.1274
-0.1851	-0.4207	-0.4777	-0.3707	-0.1206
-0.192	-0.4238	-0.4771	-0.3667	-0.1138
-0.1989	-0.4268	-0.4764	-0.3626	-0.107
-0.2057	-0.4297	-0.4756	-0.3585	-0.1001
-0.2125	-0.4326	-0.4747	-0.3543	-0.0931
-0.2191	-0.4353	-0.4738	-0.35	-0.0861
-0.2257	-0.438	-0.4728	-0.3456	-0.07904
-0.2322	-0.4406	-0.4717	-0.3412	-0.07194
-0.2386	-0.4431	-0.4705	-0.3367	-0.06479
-0.245	-0.4455	-0.4692	-0.3322	-0.05758
-0.2513	-0.4479	-0.4679	-0.3276	-0.05033
-0.2575	-0.4501	-0.4665	-0.3229	-0.04303
-0.2636	-0.4523	-0.465	-0.3181	-0.03568
-0.2696	-0.4544	-0.4634	-0.3133	-0.02829
-0.2756	-0.4564	-0.4618	-0.3085	-0.02085
-0.2814	-0.4583	-0.4601	-0.3035	-0.01336
-0.2872	-0.4601	-0.4583	-0.2985	-0.005823

0.001757	0.392	0.8325	2.476	1.814
0.009383	0.4012	0.8423	2.462	1.8
0.01705	0.4104	0.8521	2.447	1.785
0.02477	0.4197	0.8619	2.433	1.771
0.03253	0.4289	0.8717	2.418	1.757
0.04033	0.4382	0.8815	2.404	1.743
0.04817	0.4476	0.8913	2.389	1.729
0.05606	0.4569	0.9011	2.375	1.714
0.06399	0.4663	0.911	2.36	1.7
0.07196	0.4756	0.9208	2.346	1.686
0.07997	0.485	0.9306	2.332	1.672
0.08803	0.4945	0.9404	2.317	1.658
0.09612	0.5039	0.9503	2.303	1.644
0.1043	0.5134	0.9601	2.288	1.63
0.1124	0.5228	0.9699	2.274	1.616
0.1206	0.5323	0.9798	2.259	1.602
0.1289	0.5418	0.9896	2.245	1.588
0.1372	0.5514	0.9994	2.23	1.574
0.1455	0.5609	1.009	2.216	1.56
0.1539	0.5704	1.019	2.202	1.546
0.1623	0.58	1.029	2.187	1.532
0.1707	0.5896	1.039	2.173	1.518
0.1792	0.5992	1.049	2.158	1.504
0.1877	0.6088	1.058	2.144	1.49
0.1962	0.6184	1.068	2.13	1.476
0.2048	0.6281	1.078	2.115	1.462
0.2134	0.6377	1.088	2.101	1.448
0.222	0.6474	1.098	2.086	1.434
0.2307	0.657	1.108	2.072	1.421
0.2394	0.6667	1.117	2.058	1.407
0.2482	0.6764	1.127	2.043	1.393
0.2569	0.6861	1.137	2.029	1.379
0.2657	0.6958	1.147	2.014	1.366
0.2746	0.7055	1.157	2	1.352
0.2834	0.7152	1.167	1.986	1.338
0.2923	0.725	1.176	1.971	1.325
0.3013	0.7347	1.186	1.957	1.311
0.3102	0.7445	1.196	1.943	1.298
0.3192	0.7542	1.206	1.928	1.284
0.3282	0.764	1.216	1.914	1.271
0.3372	0.7737	1.226	1.9	1.257
0.3463	0.7835	1.235]	1.885	1.244
0.3554	0.7933		1.871	1.23
0.3645	0.8031	CG_force6	1.857	1.217
0.3736	0.8129	=[2.505	1.843	1.203
0.3828	0.8227	2.49	1.828	1.19

1.177	0.6116	0.1747	-0.1054	-0.2002
1.164	0.6006	0.1669	-0.1095	-0.2002
1.15	0.5896	0.1591	-0.1134	-0.2002
1.137	0.5787	0.1513	-0.1173	-0.2001
1.124	0.5678	0.1437	-0.121	-0.1999
1.111	0.557	0.1361	-0.1247	-0.1996
1.098	0.5463	0.1286	-0.1283	-0.1992
1.085	0.5357	0.1211	-0.1318	-0.1988
1.072	0.5251	0.1138	-0.1352	-0.1982
1.059	0.5146	0.1065	-0.1386	-0.1976
1.046	0.5041	0.09924	-0.1418	-0.1969
1.033	0.4937	0.09209	-0.1449	-0.1962
1.02	0.4834	0.08501	-0.148	-0.1953
1.007	0.4732	0.07802	-0.151	-0.1944
0.9946	0.463	0.0711	-0.1539	-0.1933
0.9818	0.4529	0.06426	-0.1566	-0.1922
0.9691	0.4429	0.05749	-0.1594	-0.191
0.9565	0.4329	0.05081	-0.162	-0.1898
0.9439	0.423	0.04421	-0.1645	-0.1884
0.9314	0.4132	0.03769	-0.1669	-0.187
0.9188	0.4034	0.03125	-0.1693	-0.1855
0.9064	0.3938	0.0249	-0.1716	-0.1839
0.894	0.3842	0.01863	-0.1737	-0.1822
0.8816	0.3746	0.01244	-0.1758	-0.1805
0.8693	0.3652	0.006343	-0.1778	-0.1787
0.857	0.3558	0.000329	-0.1797	-0.1768
0.8448	0.3465	-0.005598	-0.1816	-0.1748
0.8326	0.3372	-0.01144	-0.1833	-0.1727
0.8205	0.328	-0.01719	-0.185	-0.1706
0.8084	0.3189	-0.02285	-0.1865	-0.1684
0.7964	0.3099	-0.02843	-0.188	-0.1661
0.7844	0.3009	-0.03392	-0.1894	-0.1637
0.7725	0.292	-0.03931	-0.1907	-0.1612
0.7606	0.2832	-0.04462	-0.1919	-0.1587
0.7488	0.2744	-0.04984	-0.1931	-0.1561
0.7371	0.2658	-0.05497	-0.1941	-0.1534
0.7254	0.2571	-0.06	-0.1951	-0.1506
0.7137	0.2486	-0.06495	-0.196	-0.1478
0.7022	0.2401	-0.06981	-0.1968	-0.1449
0.6906	0.2317	-0.07457	-0.1975	-0.1419
0.6792	0.2234	-0.07925	-0.1982	-0.1388
0.6678	0.2151	-0.08384	-0.1987	-0.1357
0.6564	0.2069	-0.08833	-0.1992	-0.1325
0.6451	0.1987	-0.09274	-0.1996	-0.1292
0.6339	0.1907	-0.09705	-0.1998	-0.1258
0.6227	0.1827	-0.1013	-0.2001	-0.1224

-0.1188	0.1179	0.4778	0.9175	1.39
-0.1153	0.1246	0.4866	0.9276	1.4
-0.1116	0.1313	0.4956	0.9377	1.41
-0.1079	0.1381	0.5045	0.9478	1.421
-0.104	0.1449	0.5135	0.9579	1.431
-0.1002	0.1518	0.5225	0.968	1.441
-0.09621	0.1587	0.5316	0.9782	1.452
-0.09218	0.1657	0.5407	0.9883	1.462
-0.08808	0.1728	0.5498	0.9985	1.472
-0.08391	0.1799	0.559	1.009	1.483
-0.07967	0.187	0.5682	1.019	1.493
-0.07535	0.1943	0.5774	1.029	1.504
-0.07097	0.2015	0.5867	1.039	1.514
-0.06651	0.2089	0.596	1.05	1.524
-0.06198	0.2162	0.6053	1.06	1.535
-0.05739	0.2237	0.6147	1.07	1.545
-0.05272	0.2311	0.6241	1.08	1.555
-0.04799	0.2387	0.6335	1.091	1.566
-0.04319	0.2463	0.6429	1.101	1.576
-0.03831	0.2539	0.6524	1.111	1.586
-0.03337	0.2616	0.6619	1.121	1.597]
-0.02836	0.2693	0.6715	1.132	
-0.02329	0.2771	0.681	1.142	width=[0
-0.01814	0.285	0.6906	1.152	0.4999951
-0.01293	0.2928	0.7002	1.162	0.9999948
-0.007657	0.3008	0.7099	1.173	1.500005
-0.002313	0.3088	0.7196	1.183	1.999999
0.003096	0.3168	0.7292	1.193	2.5
0.008571	0.3249	0.739	1.204	2.999997
0.01411	0.333	0.7487	1.214	3.499996
0.01972	0.3412	0.7585	1.224	4.000003
0.02539	0.3494	0.7683	1.235	4.500007
0.03112	0.3576	0.7781	1.245	4.999999
0.03692	0.3659	0.7879	1.255	5.500002
0.04278	0.3743	0.7978	1.266	6.000003
0.04871	0.3827	0.8076	1.276	6.499993
0.05469	0.3911	0.8175	1.286	6.999995
0.06074	0.3996	0.8274	1.297	7.499998
0.06686	0.4081	0.8374	1.307	8.000008
0.07303	0.4167	0.8473	1.317	8.499998
0.07926	0.4253	0.8573	1.328	9.000007
0.08556	0.4339	0.8673	1.338	9.499992
0.09192	0.4426	0.8773	1.348	9.999993
0.09833	0.4513	0.8873	1.359	10.5
0.1048	0.4601	0.8974	1.369	11
0.1113	0.4689	0.9074	1.379	11.5

12	34.99997	57.99995	80.99993	103.9999
12.5	35.49997	58.49995	81.49993	104.4999
12.99999	35.99997	58.99995	81.99993	104.9999
13.5	36.49997	59.49995	82.49992	105.4999
13.99999	36.99998	59.99996	82.99993	105.9999
14.49999	37.49998	60.49996	83.49993	106.4999
14.99999	37.99997	60.99995	83.99993	106.9999
15.5	38.49997	61.49994	84.49993	107.4999
15.99999	38.99997	61.99994	84.99993	107.9999
16.49999	39.49997	62.49995	85.49993	108.4999
16.99998	39.99996	62.99995	85.99992	108.9999
17.5	40.49997	63.49995	86.49992	109.4999
17.99999	40.99997	63.99995	86.99992	109.9999
18.49998	41.49997	64.49995	87.49992	110.4999
18.99999	41.99997	64.99994	87.99993	110.9999
19.49999	42.49997	65.49995	88.49993	111.4999
20	42.99997	65.99994	88.99992	111.9999
20.49998	43.49996	66.49995	89.49993	112.4999
20.99998	43.99997	66.99994	89.99992	112.9999
21.49999	44.49996	67.49994	90.49991	113.4999
21.99999	44.99997	67.99994	90.99991	113.9999
22.49999	45.49996	68.49995	91.49992	114.4999
22.99999	45.99997	68.99995	91.99992	114.9999
23.49998	46.49996	69.49995	92.49992	115.4999
23.99999	46.99997	69.99994	92.99992	115.9999
24.49998	47.49995	70.49993	93.49992	116.4999
24.99998	47.99995	70.99995	93.99992	116.9999
25.49998	48.49996	71.49995	94.49992	117.4999
25.99998	48.99995	71.99993	94.99992	117.9999
26.49998	49.49997	72.49994	95.49992	118.4999
26.99998	49.99997	72.99994	95.99992	118.9999
27.49998	50.49996	73.49993	96.49991	119.4999
27.99998	50.99996	73.99994	96.99992	119.9999
28.49998	51.49996	74.49995	97.49992	120.4999
28.99998	51.99996	74.99993	97.99991	120.9999
29.49998	52.49996	75.49993	98.49992	121.4999
29.99998	52.99996	75.99992	98.99992	121.9999
30.49998	53.49995	76.49994	99.49992	122.4999
30.99998	53.99995	76.99992	99.99992	122.9999
31.49998	54.49996	77.49993	100.4999	123.4999
31.99998	54.99995	77.99994	100.9999	123.9999
32.49997	55.49995	78.49993	101.4999	124.4999
32.99997	55.99996	78.99993	101.9999	124.9999
33.49998	56.49996	79.49993	102.4999	125.4999
33.99997	56.99996	79.99994	102.9999	125.9999
34.49997	57.49995	80.49992	103.4999	126.4999

126.9999	149.9999	172.9998	195.9998	218.9998
127.4999	150.4999	173.4998	196.4998	219.4998
127.9999	150.9999	173.9999	196.9998	219.9998
128.4999	151.4999	174.4998	197.4998	220.4998
128.9999	151.9999	174.9999	197.9998	220.9998
129.4999	152.4999	175.4998	198.4998	221.4998
129.9999	152.9999	175.9998	198.9998	221.9998
130.4999	153.4999	176.4998	199.4998	222.4998
130.9999	153.9999	176.9998	199.9998	222.9998
131.4999	154.4999	177.4998	200.4998	223.4998
131.9999	154.9998	177.9998	200.9998	223.9998
132.4999	155.4998	178.4998	201.4998	224.4998
132.9999	155.9999	178.9999	201.9998	224.9998
133.4999	156.4999	179.4998	202.4998	225.4998
133.9999	156.9998	179.9998	202.9998	225.9998
134.4999	157.4999	180.4998	203.4998	226.4998
134.9999	157.9999	180.9998	203.9998	226.9998
135.4999	158.4999	181.4998	204.4998	227.4998
135.9999	158.9998	181.9998	204.9998	227.9998
136.4999	159.4999	182.4998	205.4998	228.4998
136.9999	159.9999	182.9998	205.9998	228.9998
137.4999	160.4999	183.4998	206.4998	229.4998
137.9999	160.9998	183.9998	206.9998	229.9998
138.4999	161.4998	184.4998	207.4998	230.4998
138.9999	161.9998	184.9999	207.9998	230.9998
139.4999	162.4999	185.4999	208.4998	231.4998
139.9999	162.9999	185.9998	208.9998	231.9998
140.4999	163.4998	186.4998	209.4998	232.4998
140.9999	163.9999	186.9998	209.9998	232.9998
141.4999	164.4999	187.4998	210.4998	233.4998
141.9999	164.9999	187.9998	210.9998	233.9998
142.4999	165.4999	188.4998	211.4998	234.4998
142.9999	165.9999	188.9998	211.9998	234.9998
143.4999	166.4998	189.4998	212.4998	235.4998
143.9999	166.9999	189.9998	212.9998	235.9998
144.4999	167.4998	190.4998	213.4998	236.4998
144.9999	167.9998	190.9998	213.9998	236.9998
145.4999	168.4999	191.4998	214.4998	237.4998
145.9999	168.9999	191.9998	214.9998	237.9998
146.4999	169.4999	192.4998	215.4998	238.4998
146.9999	169.9998	192.9998	215.9998	238.9998
147.4999	170.4998	193.4998	216.4998	239.4998
147.9999	170.9999	193.9998	216.9998	239.9998
148.4999	171.4998	194.4998	217.4998	240.4998
148.9999	171.9998	194.9998	217.9998	240.9998
149.4999	172.4998	195.4998	218.4998	241.4998

```
241.9998        fuselage
242.4998        location
242.9998
243.4998        forces=[0 1
243.9998        2 3 4 8]  %
244.4998        magnitude
244.9998        of force
245.4998
245.9998
246.4998
246.9998
247.4998
247.9998
248.4998
248.9998
249.4998
249.9997
250.4998
250.9998
251.4997
251.9998
252.4998
252.9998
253.4998
253.9998
254.4998
254.9998
255.4998
255.9998
256.4998
256.9998
257.4998
257.9998
258.4998
258.9998
259.4998
259.9998
260.4998
260.9998
261.4998
261.9998
262.4998
262.9998
263.4998
263.9998]/
264  %
```

% Match the deflection at the tail

tail_force1	1.718	1.055	0.4455	-0.06018
=[2.384	1.703	1.04	0.4327	-0.07017
2.368	1.687	1.025	0.4199	-0.0801
2.353	1.672	1.011	0.4072	-0.08996
2.337	1.657	0.9963	0.3945	-0.09976
2.322	1.641	0.9818	0.3819	-0.1095
2.306	1.626	0.9673	0.3693	-0.1192
2.291	1.611	0.9529	0.3568	-0.1288
2.275	1.595	0.9385	0.3444	-0.1383
2.26	1.58	0.9241	0.332	-0.1478
2.244	1.565	0.9098	0.3197	-0.1572
2.229	1.549	0.8954	0.3074	-0.1665
2.213	1.534	0.8812	0.2952	-0.1758
2.198	1.519	0.8669	0.2831	-0.185
2.182	1.504	0.8527	0.271	-0.1941
2.167	1.489	0.8385	0.259	-0.2032
2.151	1.473	0.8244	0.2471	-0.2122
2.136	1.458	0.8103	0.2352	-0.2211
2.12	1.443	0.7962	0.2234	-0.23
2.105	1.428	0.7822	0.2116	-0.2388
2.089	1.413	0.7682	0.2	-0.2475
2.074	1.397	0.7542	0.1883	-0.2562
2.058	1.382	0.7403	0.1768	-0.2648
2.043	1.367	0.7265	0.1653	-0.2733
2.027	1.352	0.7126	0.1539	-0.2817
2.012	1.337	0.6988	0.1425	-0.2901
1.996	1.322	0.6851	0.1313	-0.2984
1.981	1.307	0.6714	0.12	-0.3066
1.965	1.292	0.6577	0.1089	-0.3147
1.95	1.277	0.6441	0.09781	-0.3228
1.934	1.262	0.6305	0.0868	-0.3308
1.919	1.247	0.617	0.07586	-0.3387
1.903	1.232	0.6035	0.06499	-0.3465
1.888	1.217	0.5901	0.05418	-0.3542
1.872	1.202	0.5767	0.04345	-0.3619
1.857	1.187	0.5633	0.03278	-0.3695
1.841	1.173	0.55	0.02218	-0.377
1.826	1.158	0.5368	0.01165	-0.3844
1.811	1.143	0.5236	0.001188	-0.3917
1.795	1.128	0.5104	-0.009207	-0.399
1.78	1.113	0.4973	-0.01953	-0.4062
1.764	1.099	0.4843	-0.0298	-0.4132
1.749	1.084	0.4713	-0.03999	-0.4202
1.734	1.069	0.4584	-0.05012	-0.4271

-0.434	-0.6572	-0.7151	-0.6248	-0.413
-0.4407	-0.6602	-0.7146	-0.6214	-0.4073
-0.4474	-0.663	-0.7141	-0.6179	-0.4016
-0.4539	-0.6658	-0.7135	-0.6143	-0.3958
-0.4604	-0.6685	-0.7128	-0.6107	-0.39
-0.4668	-0.6712	-0.7121	-0.6071	-0.3842
-0.4731	-0.6737	-0.7113	-0.6033	-0.3783
-0.4794	-0.6762	-0.7104	-0.5996	-0.3724
-0.4855	-0.6786	-0.7094	-0.5957	-0.3665
-0.4916	-0.681	-0.7084	-0.5919	-0.3605
-0.4976	-0.6832	-0.7073	-0.5879	-0.3544
-0.5034	-0.6854	-0.7062	-0.5839	-0.3484
-0.5092	-0.6875	-0.705	-0.5799	-0.3423
-0.515	-0.6896	-0.7037	-0.5758	-0.3362
-0.5206	-0.6915	-0.7023	-0.5716	-0.33
-0.5262	-0.6934	-0.7009	-0.5674	-0.3238
-0.5316	-0.6952	-0.6994	-0.5632	-0.3176
-0.537	-0.697	-0.6978	-0.5589	-0.3113
-0.5423	-0.6986	-0.6962	-0.5545	-0.305
-0.5475	-0.7002	-0.6945	-0.5501	-0.2987
-0.5526	-0.7017	-0.6928	-0.5456	-0.2923
-0.5577	-0.7032	-0.6909	-0.5411	-0.286
-0.5626	-0.7045	-0.689	-0.5365	-0.2795
-0.5675	-0.7058	-0.6871	-0.5319	-0.2731
-0.5723	-0.707	-0.6851	-0.5273	-0.2666
-0.577	-0.7082	-0.683	-0.5225	-0.2601
-0.5817	-0.7092	-0.6808	-0.5178	-0.2536
-0.5862	-0.7102	-0.6786	-0.513	-0.247
-0.5907	-0.7111	-0.6763	-0.5081	-0.2404
-0.595	-0.712	-0.674	-0.5032	-0.2338
-0.5993	-0.7127	-0.6716	-0.4983	-0.2272
-0.6036	-0.7134	-0.6691	-0.4933	-0.2205
-0.6077	-0.714	-0.6666	-0.4882	-0.2138
-0.6118	-0.7146	-0.664	-0.4831	-0.2071
-0.6157	-0.7151	-0.6614	-0.478	-0.2003
-0.6196	-0.7154	-0.6586	-0.4728	-0.1936
-0.6234	-0.7158	-0.6559	-0.4676	-0.1868
-0.6272	-0.716	-0.653	-0.4623	-0.1799
-0.6308	-0.7162	-0.6501	-0.457	-0.1731
-0.6344	-0.7163	-0.6472	-0.4517	-0.1662
-0.6379	-0.7164	-0.6442	-0.4463	-0.1594
-0.6413	-0.7163	-0.6411	-0.4408	-0.1524
-0.6446	-0.7162	-0.6379	-0.4353	-0.1455
-0.6479	-0.716	-0.6347	-0.4298	-0.1386
-0.6511	-0.7158	-0.6315	-0.4243	-0.1316
-0.6542	-0.7155	-0.6282	-0.4187	-0.1246

-0.1176	0.218	1.912	1.266	0.6499
-0.1106	0.2254	1.898	1.252	0.6372
-0.1035	0.2329	1.884	1.239	0.6245
-0.09648	0.2403	1.87	1.225	0.6118
-0.0894	0.2478	1.855	1.211	0.5992
-0.0823	0.2552	1.841	1.197	0.5866
-0.07519	0.2626	1.827	1.183	0.574
-0.06806	0.2701	1.813	1.17	0.5615
-0.06092	0.2775	1.799	1.156	0.549
-0.05376	0.285	1.785	1.142	0.5366
-0.04658	0.2925	1.771	1.128	0.5242
-0.03939	0.2999	1.757	1.115	0.5119
-0.03219	0.3074	1.743	1.101	0.4996
-0.02498	0.3148	1.728	1.087	0.4873
-0.01775	0.3223	1.714	1.074	0.4751
-0.01051	0.3297	1.7	1.06	0.4629
-0.003255	0.3372	1.686	1.046	0.4508
0.00401	0.3446	1.672	1.033	0.4387
0.01129	0.3521	1.658	1.019	0.4266
0.01857	0.3595	1.644	1.006	0.4147
0.02587	0.367	1.63	0.9923	0.4027
0.03317	0.3744	1.616	0.9788	0.3908
0.04049	0.3819	1.602	0.9653	0.379
0.04781	0.3893	1.588	0.9518	0.3672
0.05515	0.3968	1.574	0.9384	0.3554
0.06249	0.4042	1.56	0.925	0.3437
0.06984	0.4117	1.545	0.9116	0.3321
0.0772	0.4191	1.531	0.8983	0.3205
0.08456	0.4266	1.517	0.8849	0.309
0.09193	0.434	1.503	0.8716	0.2975
0.09931	0.4415	1.489	0.8584	0.286
0.1067	0.4489	1.475	0.8451	0.2747
0.1141	0.4564	1.461	0.8319	0.2633
0.1215	0.4638]	1.447	0.8187	0.2521
0.1289		1.433	0.8055	0.2409
0.1363	tail_force2	1.419	0.7924	0.2297
0.1437	=[2.053	1.405	0.7793	0.2186
0.1511	2.039	1.391	0.7662	0.2076
0.1585	2.025	1.377	0.7531	0.1966
0.1659	2.011	1.364	0.7401	0.1857
0.1734	1.997	1.35	0.7271	0.1749
0.1808	1.983	1.336	0.7142	0.1641
0.1882	1.968	1.322	0.7013	0.1534
0.1957	1.954	1.308	0.6884	0.1427
0.2031	1.94	1.294	0.6755	0.1321
0.2105	1.926	1.28	0.6627	0.1215

0.1111	-0.298	-0.5514	-0.6301	-0.5494
0.1007	-0.3053	-0.5549	-0.63	-0.546
0.09031	-0.3126	-0.5584	-0.6298	-0.5425
0.08004	-0.3198	-0.5617	-0.6295	-0.539
0.06982	-0.3268	-0.565	-0.6292	-0.5354
0.05968	-0.3339	-0.5682	-0.6288	-0.5317
0.0496	-0.3408	-0.5713	-0.6283	-0.528
0.03959	-0.3477	-0.5743	-0.6277	-0.5242
0.02964	-0.3545	-0.5773	-0.6271	-0.5204
0.01977	-0.3612	-0.5801	-0.6264	-0.5165
0.009962	-0.3678	-0.5829	-0.6256	-0.5125
0.0002233	-0.3744	-0.5856	-0.6247	-0.5084
-0.009447	-0.3809	-0.5882	-0.6238	-0.5043
-0.01905	-0.3873	-0.5907	-0.6228	-0.5002
-0.02858	-0.3936	-0.5932	-0.6217	-0.4959
-0.03804	-0.3999	-0.5956	-0.6205	-0.4916
-0.04744	-0.406	-0.5978	-0.6193	-0.4873
-0.05676	-0.4121	-0.6	-0.618	-0.4829
-0.06602	-0.4181	-0.6022	-0.6166	-0.4784
-0.07521	-0.424	-0.6042	-0.6152	-0.4739
-0.08433	-0.4298	-0.6062	-0.6137	-0.4693
-0.09338	-0.4356	-0.6081	-0.6121	-0.4646
-0.1024	-0.4412	-0.6099	-0.6104	-0.4599
-0.1113	-0.4468	-0.6116	-0.6087	-0.4551
-0.1201	-0.4523	-0.6133	-0.6069	-0.4503
-0.1289	-0.4577	-0.6148	-0.605	-0.4454
-0.1376	-0.463	-0.6163	-0.603	-0.4404
-0.1463	-0.4683	-0.6177	-0.601	-0.4354
-0.1549	-0.4734	-0.6191	-0.5989	-0.4303
-0.1634	-0.4785	-0.6203	-0.5968	-0.4252
-0.1718	-0.4834	-0.6215	-0.5945	-0.42
-0.1802	-0.4883	-0.6226	-0.5922	-0.4148
-0.1885	-0.4931	-0.6237	-0.5898	-0.4095
-0.1968	-0.4979	-0.6246	-0.5874	-0.4041
-0.205	-0.5025	-0.6255	-0.5849	-0.3987
-0.2131	-0.507	-0.6263	-0.5823	-0.3932
-0.2212	-0.5115	-0.627	-0.5797	-0.3877
-0.2291	-0.5159	-0.6277	-0.5769	-0.3821
-0.2371	-0.5201	-0.6282	-0.5741	-0.3765
-0.2449	-0.5243	-0.6287	-0.5713	-0.3708
-0.2527	-0.5285	-0.6292	-0.5684	-0.3651
-0.2604	-0.5325	-0.6295	-0.5654	-0.3593
-0.2681	-0.5364	-0.6298	-0.5623	-0.3535
-0.2757	-0.5403	-0.63	-0.5592	-0.3476
-0.2832	-0.5441	-0.6301	-0.556	-0.3416
-0.2907	-0.5478	-0.6301	-0.5527	-0.3356

-0.3296	-0.003101	0.3883	0.8022	1.511
-0.3235	0.004878	0.3972	0.8112	1.498
-0.3173	0.01289	0.4061	0.8202	1.484
-0.3111	0.02093	0.415	0.8293	1.471
-0.3049	0.029	0.4239	0.8383	1.457
-0.2986	0.0371	0.4328	0.8473	1.443
-0.2922	0.04522	0.4418	0.8563	1.43
-0.2858	0.05338	0.4507	0.8654	1.416
-0.2794	0.06156	0.4596	0.8744	1.403
-0.2729	0.06977	0.4686	0.8834	1.389
-0.2663	0.07801	0.4776	0.8925	1.376
-0.2597	0.08627	0.4865	0.9015	1.362
-0.2531	0.09456	0.4955	0.9105]	1.349
-0.2464	0.1029	0.5045		1.335
-0.2397	0.1112	0.5135	tail_force3	1.322
-0.2329	0.1196	0.5225	=[1.933	1.308
-0.2261	0.128	0.5314	1.919	1.295
-0.2193	0.1364	0.5404	1.906	1.282
-0.2124	0.1448	0.5494	1.892	1.268
-0.2054	0.1533	0.5584	1.879	1.255
-0.1984	0.1617	0.5674	1.865	1.241
-0.1914	0.1702	0.5765	1.851	1.228
-0.1843	0.1787	0.5855	1.838	1.214
-0.1772	0.1873	0.5945	1.824	1.201
-0.17	0.1958	0.6035	1.81	1.188
-0.1629	0.2044	0.6125	1.797	1.174
-0.1556	0.213	0.6215	1.783	1.161
-0.1483	0.2216	0.6306	1.77	1.148
-0.141	0.2303	0.6396	1.756	1.134
-0.1337	0.2389	0.6486	1.742	1.121
-0.1263	0.2476	0.6576	1.729	1.108
-0.1188	0.2563	0.6667	1.715	1.094
-0.1114	0.265	0.6757	1.701	1.081
-0.1039	0.2737	0.6847	1.688	1.068
-0.09632	0.2824	0.6938	1.674	1.055
-0.08874	0.2912	0.7028	1.661	1.042
-0.08113	0.2999	0.7118	1.647	1.028
-0.07348	0.3087	0.7209	1.633	1.015
-0.06579	0.3175	0.7299	1.62	1.002
-0.05807	0.3263	0.7389	1.606	0.9889
-0.05032	0.3351	0.748	1.593	0.9758
-0.04253	0.344	0.757	1.579	0.9627
-0.03471	0.3528	0.766	1.566	0.9496
-0.02685	0.3617	0.7751	1.552	0.9366
-0.01897	0.3705	0.7841	1.538	0.9235
-0.01105	0.3794	0.7931	1.525	0.9105

0.8975	0.3329	-0.1278	-0.4463	-0.5948
0.8845	0.3216	-0.1362	-0.4514	-0.5961
0.8716	0.3103	-0.1446	-0.4565	-0.5973
0.8587	0.2991	-0.153	-0.4615	-0.5984
0.8458	0.2879	-0.1613	-0.4663	-0.5994
0.8329	0.2767	-0.1695	-0.4711	-0.6004
0.82	0.2657	-0.1776	-0.4759	-0.6013
0.8072	0.2546	-0.1857	-0.4805	-0.6021
0.7944	0.2437	-0.1937	-0.485	-0.6028
0.7816	0.2327	-0.2016	-0.4895	-0.6035
0.7689	0.2219	-0.2095	-0.4939	-0.604
0.7562	0.2111	-0.2173	-0.4981	-0.6045
0.7435	0.2003	-0.225	-0.5023	-0.605
0.7308	0.1896	-0.2327	-0.5064	-0.6053
0.7182	0.179	-0.2403	-0.5105	-0.6056
0.7056	0.1684	-0.2478	-0.5144	-0.6058
0.693	0.1579	-0.2553	-0.5183	-0.6059
0.6805	0.1474	-0.2627	-0.522	-0.6059
0.668	0.137	-0.2701	-0.5257	-0.6059
0.6555	0.1267	-0.2773	-0.5293	-0.6058
0.6431	0.1164	-0.2846	-0.5328	-0.6056
0.6307	0.1062	-0.2917	-0.5362	-0.6053
0.6183	0.09601	-0.2988	-0.5396	-0.605
0.6059	0.08592	-0.3058	-0.5428	-0.6046
0.5936	0.07589	-0.3127	-0.546	-0.6041
0.5814	0.06593	-0.3196	-0.5491	-0.6035
0.5691	0.05603	-0.3264	-0.5521	-0.6029
0.5569	0.04619	-0.3331	-0.555	-0.6021
0.5448	0.03643	-0.3397	-0.5579	-0.6013
0.5326	0.02673	-0.3463	-0.5606	-0.6005
0.5205	0.01709	-0.3528	-0.5633	-0.5995
0.5085	0.007525	-0.3593	-0.5659	-0.5985
0.4965	-0.001974	-0.3656	-0.5684	-0.5974
0.4845	-0.01141	-0.3719	-0.5708	-0.5962
0.4726	-0.02077	-0.3781	-0.5731	-0.595
0.4607	-0.03006	-0.3842	-0.5754	-0.5936
0.4489	-0.03929	-0.3903	-0.5775	-0.5922
0.4371	-0.04845	-0.3963	-0.5796	-0.5908
0.4253	-0.05754	-0.4021	-0.5816	-0.5892
0.4136	-0.06656	-0.4079	-0.5836	-0.5876
0.4019	-0.07551	-0.4137	-0.5854	-0.5859
0.3903	-0.08439	-0.4193	-0.5872	-0.5841
0.3787	-0.09321	-0.4249	-0.5889	-0.5823
0.3672	-0.102	-0.4304	-0.5905	-0.5804
0.3557	-0.1106	-0.4358	-0.592	-0.5784
0.3443	-0.1192	-0.4411	-0.5934	-0.5763

-0.5742	-0.4016	-0.1027	0.285	0.7176
-0.572	-0.3963	-0.09505	0.2941	0.7272
-0.5697	-0.391	-0.08737	0.3032	0.7368
-0.5674	-0.3856	-0.07965	0.3124	0.7464
-0.565	-0.3801	-0.07189	0.3215	0.756
-0.5625	-0.3746	-0.06409	0.3307	0.7656
-0.5599	-0.369	-0.05625	0.3399	0.7752
-0.5573	-0.3634	-0.04836	0.3491	0.7848
-0.5546	-0.3577	-0.04044	0.3583	0.7944
-0.5518	-0.352	-0.03249	0.3676	0.804
-0.5489	-0.3462	-0.02449	0.3768	0.8136
-0.546	-0.3403	-0.01645	0.3861	0.8232
-0.543	-0.3344	-0.008382	0.3954	0.8328
-0.54	-0.3285	-0.0002721	0.4047	0.8424
-0.5368	-0.3224	0.007874	0.414	0.852
-0.5336	-0.3164	0.01606	0.4233	0.8616
-0.5304	-0.3102	0.02427	0.4327	0.8712
-0.527	-0.304	0.03252	0.4421	0.8808
-0.5236	-0.2978	0.04081	0.4514	0.8904
-0.5202	-0.2915	0.04913	0.4608	0.9001
-0.5166	-0.2852	0.05749	0.4702	0.9097
-0.513	-0.2788	0.06588	0.4796	0.9193
-0.5093	-0.2723	0.0743	0.4891	0.9289
-0.5056	-0.2658	0.08275	0.4985	0.9385
-0.5018	-0.2592	0.09124	0.5079	0.9481
-0.4979	-0.2526	0.09975	0.5174	0.9577
-0.494	-0.246	0.1083	0.5269	0.9673
-0.49	-0.2393	0.1169	0.5363	0.9769
-0.4859	-0.2325	0.1255	0.5458	0.9865
-0.4817	-0.2257	0.1341	0.5553	0.9961
-0.4775	-0.2188	0.1428	0.5648	1.006
-0.4733	-0.2119	0.1515	0.5743	1.015
-0.4689	-0.205	0.1602	0.5838	1.025
-0.4645	-0.198	0.169	0.5934	1.035
-0.4601	-0.1909	0.1777	0.6029	1.044
-0.4555	-0.1838	0.1865	0.6124	1.054
-0.4509	-0.1767	0.1954	0.622	1.063
-0.4463	-0.1695	0.2042	0.6315	1.073]
-0.4416	-0.1622	0.2131	0.6411	
-0.4368	-0.1549	0.222	0.6506	tail_force4
-0.4319	-0.1476	0.231	0.6602	=[1.813
-0.427	-0.1402	0.2399	0.6697	1.8
-0.4221	-0.1328	0.2489	0.6793	1.787
-0.417	-0.1253	0.2579	0.6889	1.774
-0.4119	-0.1178	0.2669	0.6985	1.761
-0.4068	-0.1103	0.276	0.7081	1.748

1.735	1.141	0.5717	0.07409	-0.2985
1.722	1.128	0.5599	0.06451	-0.305
1.709	1.115	0.5482	0.05498	-0.3115
1.696	1.102	0.5365	0.04552	-0.3179
1.683	1.09	0.5248	0.03612	-0.3242
1.67	1.077	0.5132	0.02678	-0.3305
1.657	1.064	0.5016	0.01751	-0.3367
1.644	1.052	0.49	0.008303	-0.3428
1.631	1.039	0.4785	-0.0008378	-0.3488
1.618	1.026	0.467	-0.009913	-0.3548
1.605	1.014	0.4555	-0.01892	-0.3607
1.592	1.001	0.4441	-0.02786	-0.3665
1.579	0.9883	0.4327	-0.03674	-0.3723
1.566	0.9756	0.4214	-0.04554	-0.3779
1.553	0.9631	0.4101	-0.05428	-0.3835
1.54	0.9505	0.3989	-0.06295	-0.3891
1.527	0.9379	0.3877	-0.07156	-0.3945
1.514	0.9254	0.3765	-0.08009	-0.3999
1.501	0.9129	0.3654	-0.08856	-0.4051
1.489	0.9004	0.3543	-0.09696	-0.4103
1.476	0.8879	0.3433	-0.1053	-0.4154
1.463	0.8754	0.3323	-0.1136	-0.4205
1.45	0.863	0.3213	-0.1217	-0.4254
1.437	0.8506	0.3104	-0.1299	-0.4303
1.424	0.8382	0.2996	-0.1379	-0.4351
1.411	0.8258	0.2888	-0.1459	-0.4398
1.398	0.8134	0.278	-0.1539	-0.4444
1.385	0.8011	0.2673	-0.1617	-0.4489
1.372	0.7888	0.2567	-0.1695	-0.4534
1.359	0.7765	0.2461	-0.1772	-0.4577
1.346	0.7642	0.2355	-0.1849	-0.462
1.333	0.752	0.225	-0.1925	-0.4662
1.32	0.7398	0.2145	-0.2	-0.4703
1.308	0.7276	0.2042	-0.2075	-0.4743
1.295	0.7154	0.1938	-0.2149	-0.4782
1.282	0.7033	0.1835	-0.2222	-0.4821
1.269	0.6912	0.1733	-0.2294	-0.4858
1.256	0.6791	0.1631	-0.2366	-0.4895
1.243	0.6671	0.153	-0.2438	-0.4931
1.23	0.655	0.1429	-0.2508	-0.4966
1.217	0.643	0.1329	-0.2578	-0.5
1.205	0.6311	0.123	-0.2648	-0.5033
1.192	0.6191	0.1131	-0.2717	-0.5066
1.179	0.6072	0.1032	-0.2785	-0.5097
1.166	0.5954	0.09346	-0.2852	-0.5128
1.153	0.5835	0.08375	-0.2919	-0.5158

-0.5187	-0.5634	-0.4463	-0.1877	0.1803
-0.5215	-0.5625	-0.4421	-0.1807	0.1893
-0.5242	-0.5616	-0.4379	-0.1737	0.1982
-0.5269	-0.5605	-0.4335	-0.1666	0.2072
-0.5294	-0.5594	-0.4291	-0.1595	0.2162
-0.5319	-0.5582	-0.4246	-0.1523	0.2252
-0.5343	-0.557	-0.4201	-0.145	0.2343
-0.5366	-0.5557	-0.4155	-0.1378	0.2434
-0.5388	-0.5542	-0.4108	-0.1304	0.2525
-0.541	-0.5528	-0.406	-0.1231	0.2617
-0.543	-0.5512	-0.4012	-0.1156	0.2709
-0.545	-0.5496	-0.3964	-0.1082	0.2801
-0.5469	-0.5478	-0.3914	-0.1006	0.2893
-0.5487	-0.5461	-0.3864	-0.09307	0.2986
-0.5504	-0.5442	-0.3814	-0.08546	0.3079
-0.5521	-0.5423	-0.3762	-0.0778	0.3172
-0.5536	-0.5403	-0.371	-0.07009	0.3265
-0.5551	-0.5382	-0.3658	-0.06234	0.3359
-0.5565	-0.536	-0.3605	-0.05454	0.3453
-0.5578	-0.5338	-0.3551	-0.0467	0.3547
-0.5591	-0.5315	-0.3497	-0.03881	0.3641
-0.5602	-0.5291	-0.3442	-0.03088	0.3736
-0.5613	-0.5266	-0.3386	-0.0229	0.3831
-0.5623	-0.5241	-0.333	-0.01489	0.3926
-0.5632	-0.5215	-0.3273	-0.006828	0.4021
-0.564	-0.5188	-0.3215	0.001273	0.4117
-0.5648	-0.5161	-0.3157	0.009416	0.4212
-0.5654	-0.5133	-0.3099	0.0176	0.4308
-0.566	-0.5104	-0.304	0.02583	0.4404
-0.5665	-0.5074	-0.298	0.03409	0.4501
-0.567	-0.5044	-0.2919	0.0424	0.4597
-0.5673	-0.5013	-0.2858	0.05074	0.4694
-0.5676	-0.4981	-0.2797	0.05913	0.4791
-0.5678	-0.4949	-0.2735	0.06755	0.4888
-0.5679	-0.4916	-0.2672	0.07601	0.4985
-0.568	-0.4882	-0.2609	0.08451	0.5082
-0.5679	-0.4847	-0.2545	0.09304	0.518
-0.5678	-0.4812	-0.2481	0.1016	0.5277
-0.5677	-0.4776	-0.2416	0.1102	0.5375
-0.5674	-0.4739	-0.235	0.1189	0.5473
-0.5671	-0.4702	-0.2284	0.1275	0.5571
-0.5666	-0.4664	-0.2218	0.1363	0.5669
-0.5661	-0.4625	-0.215	0.145	0.5768
-0.5656	-0.4586	-0.2083	0.1538	0.5866
-0.5649	-0.4546	-0.2015	0.1626	0.5965
-0.5642	-0.4505	-0.1946	0.1715	0.6063

0.6162	1.077	1.358	0.7935	0.2733
0.6261	1.087	1.345	0.7815	0.2629
0.636	1.097	1.333	0.7696	0.2525
0.6459	1.108	1.32	0.7577	0.2421
0.6559	1.118	1.308	0.7458	0.2318
0.6658	1.128	1.296	0.734	0.2216
0.6757	1.138	1.283	0.7221	0.2114
0.6857	1.148	1.271	0.7103	0.2012
0.6957	1.158	1.258	0.6985	0.1911
0.7056	1.168	1.246	0.6868	0.1811
0.7156	1.178	1.233	0.675	0.1711
0.7256	1.188	1.221	0.6633	0.1611
0.7356	1.198	1.209	0.6516	0.1512
0.7456	1.208	1.196	0.64	0.1414
0.7556	1.218	1.184	0.6283	0.1316
0.7656	1.228	1.171	0.6167	0.1219
0.7756	1.238]	1.159	0.6051	0.1122
0.7856		1.147	0.5936	0.1026
0.7956	tail_force5	1.134	0.5821	0.09302
0.8057	=[1.695	1.122	0.5706	0.08352
0.8157	1.682	1.11	0.5591	0.07407
0.8257	1.67	1.097	0.5477	0.06468
0.8358	1.657	1.085	0.5363	0.05535
0.8458	1.645	1.073	0.5249	0.04609
0.8559	1.632	1.06	0.5135	0.03688
0.8659	1.62	1.048	0.5022	0.02773
0.876	1.607	1.036	0.491	0.01865
0.886	1.595	1.024	0.4797	0.009623
0.8961	1.582	1.011	0.4685	0.0006636
0.9061	1.57	0.9992	0.4573	-0.008232
0.9162	1.557	0.987	0.4462	-0.01706
0.9263	1.545	0.9748	0.4351	-0.02583
0.9363	1.532	0.9626	0.424	-0.03453
0.9464	1.52	0.9504	0.413	-0.04317
0.9564	1.507	0.9382	0.402	-0.05174
0.9665	1.495	0.9261	0.3911	-0.06024
0.9766	1.482	0.9139	0.3802	-0.06868
0.9866	1.47	0.9018	0.3693	-0.07705
0.9967	1.457	0.8897	0.3585	-0.08535
1.007	1.445	0.8776	0.3477	-0.09358
1.017	1.433	0.8655	0.3369	-0.1018
1.027	1.42	0.8535	0.3262	-0.1098
1.037	1.408	0.8414	0.3156	-0.1179
1.047	1.395	0.8294	0.3049	-0.1258
1.057	1.383	0.8174	0.2944	-0.1337
1.067	1.37	0.8054	0.2838	-0.1416

-0.1493	-0.4329	-0.5489	-0.4936	-0.2838
-0.157	-0.4373	-0.5495	-0.4906	-0.2777
-0.1646	-0.4417	-0.55	-0.4876	-0.2716
-0.1722	-0.4459	-0.5504	-0.4844	-0.2653
-0.1797	-0.4501	-0.5507	-0.4812	-0.2591
-0.1871	-0.4542	-0.5509	-0.4779	-0.2527
-0.1944	-0.4583	-0.5511	-0.4746	-0.2463
-0.2017	-0.4622	-0.5511	-0.4712	-0.2398
-0.2089	-0.466	-0.5511	-0.4677	-0.2333
-0.2161	-0.4698	-0.551	-0.4641	-0.2267
-0.2232	-0.4735	-0.5509	-0.4605	-0.2201
-0.2302	-0.4771	-0.5506	-0.4568	-0.2134
-0.2371	-0.4806	-0.5503	-0.453	-0.2066
-0.244	-0.484	-0.5499	-0.4491	-0.1998
-0.2509	-0.4873	-0.5494	-0.4452	-0.1929
-0.2576	-0.4905	-0.5489	-0.4412	-0.186
-0.2643	-0.4937	-0.5482	-0.4371	-0.179
-0.2709	-0.4968	-0.5475	-0.433	-0.172
-0.2775	-0.4998	-0.5467	-0.4288	-0.1649
-0.284	-0.5027	-0.5459	-0.4245	-0.1577
-0.2904	-0.5055	-0.5449	-0.4202	-0.1505
-0.2968	-0.5082	-0.5439	-0.4158	-0.1432
-0.3031	-0.5108	-0.5428	-0.4113	-0.1359
-0.3093	-0.5134	-0.5416	-0.4067	-0.1285
-0.3155	-0.5159	-0.5404	-0.4021	-0.1211
-0.3216	-0.5183	-0.5391	-0.3974	-0.1137
-0.3276	-0.5206	-0.5376	-0.3927	-0.1061
-0.3336	-0.5228	-0.5362	-0.3879	-0.09855
-0.3395	-0.5249	-0.5346	-0.383	-0.09092
-0.3453	-0.527	-0.533	-0.378	-0.08324
-0.351	-0.5289	-0.5313	-0.373	-0.0755
-0.3567	-0.5308	-0.5295	-0.3679	-0.06772
-0.3623	-0.5326	-0.5276	-0.3628	-0.05989
-0.3679	-0.5343	-0.5257	-0.3575	-0.05201
-0.3733	-0.5359	-0.5237	-0.3523	-0.04408
-0.3787	-0.5375	-0.5216	-0.3469	-0.0361
-0.384	-0.5389	-0.5194	-0.3415	-0.02807
-0.3893	-0.5403	-0.5172	-0.336	-0.02
-0.3944	-0.5416	-0.5148	-0.3305	-0.01187
-0.3995	-0.5428	-0.5124	-0.3249	-0.003705
-0.4045	-0.5439	-0.51	-0.3192	0.004511
-0.4095	-0.545	-0.5074	-0.3135	0.01277
-0.4143	-0.5459	-0.5048	-0.3077	0.02108
-0.4191	-0.5468	-0.5021	-0.3018	0.02944
-0.4238	-0.5476	-0.4994	-0.2959	0.03783
-0.4284	-0.5483	-0.4965	-0.2899	0.04628

0.05476	0.485	0.9632	1.552	1.003
0.06329	0.4951	0.9738	1.54	0.9912
0.07187	0.5051	0.9844	1.528	0.9794
0.08048	0.5152	0.995	1.516	0.9676
0.08914	0.5253	1.006	1.504	0.9558
0.09784	0.5355	1.016	1.492	0.944
0.1066	0.5456	1.027	1.48	0.9322
0.1154	0.5558	1.037	1.468	0.9205
0.1242	0.566	1.048	1.456	0.9088
0.1331	0.5762	1.059	1.444	0.897
0.142	0.5864	1.069	1.432	0.8853
0.1509	0.5967	1.08	1.42	0.8736
0.1599	0.6069	1.091	1.408	0.8619
0.1689	0.6172	1.101	1.397	0.8503
0.178	0.6275	1.112	1.385	0.8386
0.187	0.6378	1.123	1.373	0.827
0.1962	0.6482	1.133	1.361	0.8154
0.2053	0.6585	1.144	1.349	0.8037
0.2145	0.6689	1.154	1.337	0.7922
0.2238	0.6792	1.165	1.325	0.7806
0.2331	0.6896	1.176	1.313	0.769
0.2424	0.7	1.186	1.301	0.7575
0.2517	0.7105	1.197	1.289	0.746
0.2611	0.7209	1.208	1.277	0.7345
0.2705	0.7313	1.218	1.265	0.723
0.2799	0.7418	1.229	1.253	0.7115
0.2894	0.7522	1.24	1.241	0.7001
0.2989	0.7627	1.25	1.229	0.6887
0.3085	0.7732	1.261	1.217	0.6773
0.318	0.7837	1.271	1.205	0.6659
0.3276	0.7942	1.282	1.193	0.6545
0.3373	0.8047	1.293	1.181	0.6432
0.3469	0.8152	1.303	1.169	0.6319
0.3566	0.8257	1.314	1.157	0.6206
0.3663	0.8363	1.325	1.145	0.6093
0.3761	0.8468	1.335	1.133	0.5981
0.3859	0.8574	1.346	1.122	0.5869
0.3957	0.8679	1.357	1.11	0.5757
0.4055	0.8785	1.367	1.098	0.5645
0.4153	0.8891	1.378	1.086	0.5534
0.4252	0.8996	1.388	1.074	0.5423
0.4351	0.9102	1.399]	1.062	0.5312
0.4451	0.9208		1.05	0.5201
0.455	0.9314	tail_force6	1.038	0.5091
0.465	0.942	=[1.576	1.027	0.4981
0.475	0.9526	1.564	1.015	0.4871

0.4762	0.0163	-0.3219	-0.5099	-0.5217
0.4653	0.007479	-0.3277	-0.512	-0.52
0.4544	-0.001287	-0.3334	-0.514	-0.5183
0.4436	-0.009991	-0.3391	-0.516	-0.5166
0.4328	-0.01863	-0.3447	-0.5179	-0.5147
0.422	-0.02721	-0.3502	-0.5196	-0.5128
0.4113	-0.03573	-0.3556	-0.5213	-0.5108
0.4006	-0.04419	-0.361	-0.523	-0.5087
0.3899	-0.05258	-0.3663	-0.5245	-0.5065
0.3792	-0.06091	-0.3716	-0.5259	-0.5043
0.3686	-0.06917	-0.3768	-0.5273	-0.502
0.3581	-0.07737	-0.3819	-0.5286	-0.4996
0.3476	-0.0855	-0.3869	-0.5298	-0.4971
0.3371	-0.09356	-0.3918	-0.5309	-0.4945
0.3266	-0.1016	-0.3967	-0.5319	-0.4919
0.3162	-0.1095	-0.4015	-0.5328	-0.4892
0.3058	-0.1174	-0.4063	-0.5337	-0.4865
0.2955	-0.1252	-0.4109	-0.5345	-0.4836
0.2852	-0.1329	-0.4155	-0.5352	-0.4807
0.275	-0.1405	-0.42	-0.5358	-0.4777
0.2648	-0.1481	-0.4244	-0.5363	-0.4746
0.2546	-0.1557	-0.4287	-0.5367	-0.4715
0.2445	-0.1631	-0.433	-0.5371	-0.4682
0.2344	-0.1705	-0.4372	-0.5374	-0.4649
0.2244	-0.1778	-0.4413	-0.5376	-0.4616
0.2144	-0.1851	-0.4453	-0.5377	-0.4581
0.2045	-0.1923	-0.4492	-0.5377	-0.4546
0.1946	-0.1994	-0.4531	-0.5377	-0.451
0.1847	-0.2064	-0.4568	-0.5375	-0.4473
0.1749	-0.2134	-0.4605	-0.5373	-0.4436
0.1652	-0.2203	-0.4641	-0.537	-0.4398
0.1555	-0.2272	-0.4676	-0.5367	-0.4359
0.1458	-0.2339	-0.471	-0.5362	-0.4319
0.1362	-0.2407	-0.4743	-0.5357	-0.4279
0.1267	-0.2473	-0.4776	-0.5351	-0.4238
0.1172	-0.2539	-0.4808	-0.5344	-0.4196
0.1077	-0.2604	-0.4838	-0.5336	-0.4154
0.09834	-0.2668	-0.4868	-0.5328	-0.4111
0.089	-0.2732	-0.4897	-0.5318	-0.4067
0.07971	-0.2795	-0.4926	-0.5308	-0.4022
0.07049	-0.2858	-0.4953	-0.5298	-0.3977
0.06131	-0.292	-0.4979	-0.5286	-0.3931
0.0522	-0.2981	-0.5005	-0.5274	-0.3884
0.04314	-0.3041	-0.503	-0.5261	-0.3837
0.03413	-0.3101	-0.5053	-0.5247	-0.3789
0.02519	-0.316	-0.5076	-0.5232	-0.374

-0.369	-0.07142	0.3397	0.8233	1.336
-0.364	-0.06356	0.3496	0.8343	1.347
-0.3589	-0.05564	0.3596	0.8453	1.358
-0.3538	-0.04767	0.3695	0.8563	1.369
-0.3485	-0.03964	0.3795	0.8673	1.381
-0.3432	-0.03156	0.3896	0.8783	1.392
-0.3379	-0.02343	0.3997	0.8894	1.403
-0.3325	-0.01525	0.4098	0.9004	1.414
-0.327	-0.007016	0.4199	0.9115	1.425
-0.3214	0.001268	0.43	0.9225	1.437
-0.3158	0.009603	0.4402	0.9336	1.448
-0.3101	0.01799	0.4505	0.9447	1.459
-0.3043	0.02642	0.4607	0.9558	1.47
-0.2985	0.03491	0.471	0.9669	1.481
-0.2926	0.04344	0.4813	0.978	1.493
-0.2866	0.05202	0.4916	0.9891	1.504
-0.2806	0.06065	0.502	1	1.515
-0.2745	0.06933	0.5124	1.011	1.526
-0.2684	0.07805	0.5228	1.023	1.537
-0.2622	0.08682	0.5332	1.034	1.549
-0.2559	0.09564	0.5437	1.045	1.56]
-0.2495	0.1045	0.5542	1.056	
-0.2431	0.1134	0.5647	1.067	tail_force7
-0.2367	0.1224	0.5753	1.078	=[1.488
-0.2301	0.1314	0.5858	1.089	1.476
-0.2235	0.1404	0.5964	1.101	1.464
-0.2169	0.1495	0.607	1.112	1.453
-0.2102	0.1586	0.6177	1.123	1.441
-0.2034	0.1678	0.6283	1.134	1.43
-0.1966	0.177	0.639	1.145	1.418
-0.1897	0.1863	0.6497	1.157	1.406
-0.1827	0.1956	0.6604	1.168	1.395
-0.1757	0.2049	0.6712	1.179	1.383
-0.1686	0.2143	0.6819	1.19	1.371
-0.1615	0.2237	0.6927	1.201	1.36
-0.1543	0.2332	0.7035	1.212	1.348
-0.147	0.2427	0.7143	1.224	1.337
-0.1397	0.2522	0.7251	1.235	1.325
-0.1324	0.2618	0.736	1.246	1.313
-0.125	0.2714	0.7468	1.257	1.302
-0.1175	0.281	0.7577	1.268	1.29
-0.1099	0.2907	0.7686	1.28	1.279
-0.1023	0.3005	0.7795	1.291	1.267
-0.0947	0.3102	0.7905	1.302	1.255
-0.08699	0.32	0.8014	1.313	1.244
-0.07924	0.3299	0.8123	1.325	1.232

1.221	0.6945	0.2089	-0.184	-0.4396
1.209	0.6834	0.1992	-0.1911	-0.4435
1.197	0.6722	0.1895	-0.1981	-0.4472
1.186	0.6611	0.1798	-0.205	-0.451
1.174	0.6501	0.1702	-0.2119	-0.4546
1.163	0.639	0.1606	-0.2187	-0.4581
1.151	0.6279	0.1511	-0.2254	-0.4616
1.139	0.6169	0.1416	-0.2321	-0.465
1.128	0.6059	0.1322	-0.2387	-0.4683
1.116	0.5949	0.1229	-0.2452	-0.4715
1.105	0.584	0.1135	-0.2517	-0.4746
1.093	0.573	0.1043	-0.2581	-0.4776
1.082	0.5621	0.09503	-0.2644	-0.4806
1.07	0.5512	0.08586	-0.2707	-0.4835
1.059	0.5404	0.07674	-0.2769	-0.4862
1.047	0.5295	0.06767	-0.283	-0.4889
1.036	0.5187	0.05865	-0.2891	-0.4915
1.024	0.5079	0.04969	-0.2951	-0.4941
1.012	0.4971	0.04079	-0.301	-0.4965
1.001	0.4864	0.03194	-0.3069	-0.4988
0.9895	0.4757	0.02314	-0.3127	-0.5011
0.978	0.465	0.0144	-0.3184	-0.5033
0.9665	0.4544	0.005718	-0.3241	-0.5054
0.9551	0.4438	-0.002907	-0.3297	-0.5074
0.9436	0.4332	-0.01147	-0.3353	-0.5093
0.9322	0.4226	-0.01998	-0.3407	-0.5111
0.9207	0.4121	-0.02843	-0.3462	-0.5128
0.9093	0.4016	-0.03682	-0.3515	-0.5145
0.8979	0.3911	-0.04514	-0.3568	-0.5161
0.8864	0.3807	-0.05341	-0.362	-0.5176
0.8751	0.3703	-0.06161	-0.3671	-0.519
0.8637	0.3599	-0.06975	-0.3722	-0.5203
0.8523	0.3496	-0.07783	-0.3772	-0.5215
0.8409	0.3393	-0.08584	-0.3821	-0.5226
0.8296	0.329	-0.09379	-0.387	-0.5237
0.8182	0.3188	-0.1017	-0.3918	-0.5247
0.8069	0.3086	-0.1095	-0.3965	-0.5256
0.7956	0.2985	-0.1172	-0.4012	-0.5264
0.7843	0.2884	-0.1249	-0.4057	-0.5271
0.773	0.2783	-0.1326	-0.4102	-0.5277
0.7618	0.2682	-0.1401	-0.4147	-0.5283
0.7505	0.2583	-0.1476	-0.419	-0.5287
0.7393	0.2483	-0.155	-0.4233	-0.5291
0.7281	0.2384	-0.1624	-0.4275	-0.5294
0.7169	0.2285	-0.1696	-0.4316	-0.5297
0.7057	0.2187	-0.1769	-0.4356	-0.5298

-0.5298	-0.4464	-0.2059	0.1671	0.6361
-0.5298	-0.4428	-0.1991	0.1764	0.647
-0.5297	-0.4391	-0.1923	0.1858	0.658
-0.5295	-0.4354	-0.1853	0.1952	0.669
-0.5292	-0.4315	-0.1783	0.2046	0.68
-0.5289	-0.4276	-0.1713	0.2141	0.691
-0.5284	-0.4236	-0.1641	0.2237	0.7021
-0.5279	-0.4195	-0.1569	0.2333	0.7132
-0.5273	-0.4154	-0.1497	0.2429	0.7243
-0.5266	-0.4112	-0.1424	0.2526	0.7354
-0.5259	-0.4069	-0.135	0.2623	0.7465
-0.525	-0.4025	-0.1276	0.2721	0.7577
-0.5241	-0.3981	-0.1201	0.2819	0.7689
-0.5231	-0.3936	-0.1126	0.2917	0.7801
-0.522	-0.389	-0.105	0.3016	0.7913
-0.5209	-0.3844	-0.09731	0.3115	0.8025
-0.5196	-0.3796	-0.08959	0.3214	0.8138
-0.5183	-0.3749	-0.08181	0.3314	0.825
-0.5169	-0.37	-0.07398	0.3415	0.8363
-0.5154	-0.3651	-0.06609	0.3516	0.8476
-0.5139	-0.3601	-0.05814	0.3617	0.859
-0.5123	-0.355	-0.05014	0.3718	0.8703
-0.5106	-0.3498	-0.04208	0.382	0.8816
-0.5088	-0.3446	-0.03396	0.3922	0.893
-0.5069	-0.3393	-0.02579	0.4025	0.9044
-0.505	-0.334	-0.01757	0.4128	0.9158
-0.503	-0.3285	-0.009288	0.4231	0.9272
-0.5009	-0.3231	-0.0009559	0.4334	0.9386
-0.4987	-0.3175	0.007431	0.4438	0.95
-0.4964	-0.3119	0.01587	0.4542	0.9615
-0.4941	-0.3062	0.02436	0.4647	0.9729
-0.4917	-0.3004	0.03291	0.4752	0.9844
-0.4892	-0.2946	0.0415	0.4857	0.9959
-0.4867	-0.2887	0.05015	0.4963	1.007
-0.484	-0.2827	0.05885	0.5068	1.019
-0.4813	-0.2767	0.0676	0.5175	1.03
-0.4785	-0.2706	0.0764	0.5281	1.042
-0.4757	-0.2644	0.08525	0.5388	1.053
-0.4727	-0.2582	0.09414	0.5495	1.065
-0.4697	-0.2519	0.1031	0.5602	1.076
-0.4666	-0.2455	0.1121	0.571	1.088
-0.4634	-0.2391	0.1211	0.5818	1.1
-0.4602	-0.2326	0.1302	0.5926	1.111
-0.4569	-0.226	0.1394	0.6034	1.123
-0.4535	-0.2194	0.1486	0.6143	1.134
-0.45	-0.2127	0.1578	0.6252	1.146

1.157		21.99999	44.99997	67.99994
1.169	width_tail=	22.49999	45.49996	68.49995
1.181	[0	22.99999	45.99997	68.99995
1.192	0.4999951	23.49998	46.49996	69.49995
1.204	0.9999948	23.99999	46.99997	69.99994
1.215	1.500005	24.49998	47.49995	70.49993
1.227	1.999999	24.99998	47.99995	70.99995
1.239	2.5	25.49998	48.49996	71.49995
1.25	2.999997	25.99998	48.99995	71.99993
1.262	3.499996	26.49998	49.49997	72.49994
1.273	4.000003	26.99998	49.99997	72.99994
1.285	4.500007	27.49998	50.49996	73.49993
1.297	4.999999	27.99998	50.99996	73.99994
1.308	5.500002	28.49998	51.49996	74.49995
1.32	6.000003	28.99998	51.99996	74.99993
1.331	6.499993	29.49998	52.49996	75.49993
1.343	6.999995	29.99998	52.99996	75.99992
1.355	7.499998	30.49998	53.49995	76.49994
1.366	8.000008	30.99998	53.99995	76.99992
1.378	8.499998	31.49998	54.49996	77.49993
1.39	9.000007	31.99998	54.99995	77.99994
1.401	9.499992	32.49997	55.49995	78.49993
1.413	9.999993	32.99997	55.99996	78.99993
1.424	10.5	33.49998	56.49996	79.49993
1.436	11	33.99997	56.99996	79.99994
1.448	11.5	34.49997	57.49995	80.49992
1.459	12	34.99997	57.99995	80.99993
1.471	12.5	35.49997	58.49995	81.49993
1.483	12.99999	35.99997	58.99995	81.99993
1.494	13.5	36.49997	59.49995	82.49992
1.506	13.99999	36.99998	59.99996	82.99993
1.518	14.49999	37.49998	60.49996	83.49993
1.529	14.99999	37.99997	60.99995	83.99993
1.541	15.5	38.49997	61.49994	84.49993
1.552	15.99999	38.99997	61.99994	84.99993
1.564	16.49999	39.49997	62.49995	85.49993
1.576	16.99998	39.99996	62.99995	85.99992
1.587	17.5	40.49997	63.49995	86.49992
1.599	17.99999	40.99997	63.99995	86.99992
1.611	18.49998	41.49997	64.49995	87.49992
1.622	18.99999	41.99997	64.99994	87.99993
1.634	19.49999	42.49997	65.49995	88.49993
1.645	20	42.99997	65.99994	88.99992
1.657	20.49998	43.49996	66.49995	89.49993
1.669	20.99998	43.99997	66.99994	89.99992
1.68]	21.49999	44.49996	67.49994	90.49991

90.99991	113.9999	136.9999	159.9999	182.9998
91.49992	114.4999	137.4999	160.4999	183.4998
91.99992	114.9999	137.9999	160.9998	183.9998
92.49992	115.4999	138.4999	161.4998	184.4998
92.99992	115.9999	138.9999	161.9998	184.9999
93.49992	116.4999	139.4999	162.4999	185.4999
93.99992	116.9999	139.9999	162.9999	185.9998
94.49992	117.4999	140.4999	163.4998	186.4998
94.99992	117.9999	140.9999	163.9999	186.9998
95.49992	118.4999	141.4999	164.4999	187.4998
95.99992	118.9999	141.9999	164.9999	187.9998
96.49991	119.4999	142.4999	165.4999	188.4998
96.99992	119.9999	142.9999	165.9999	188.9998
97.49992	120.4999	143.4999	166.4998	189.4998
97.99991	120.9999	143.9999	166.9999	189.9998
98.49992	121.4999	144.4999	167.4998	190.4998
98.99992	121.9999	144.9999	167.9998	190.9998
99.49992	122.4999	145.4999	168.4999	191.4998
99.99992	122.9999	145.9999	168.9999	191.9998
100.4999	123.4999	146.4999	169.4999	192.4998
100.9999	123.9999	146.9999	169.9998	192.9998
101.4999	124.4999	147.4999	170.4998	193.4998
101.9999	124.9999	147.9999	170.9999	193.9998
102.4999	125.4999	148.4999	171.4998	194.4998
102.9999	125.9999	148.9999	171.9998	194.9998
103.4999	126.4999	149.4999	172.4998	195.4998
103.9999	126.9999	149.9999	172.9998	195.9998
104.4999	127.4999	150.4999	173.4998	196.4998
104.9999	127.9999	150.9999	173.9999	196.9998
105.4999	128.4999	151.4999	174.4998	197.4998
105.9999	128.9999	151.9999	174.9999	197.9998
106.4999	129.4999	152.4999	175.4998	198.4998
106.9999	129.9999	152.9999	175.9998	198.9998
107.4999	130.4999	153.4999	176.4998	199.4998
107.9999	130.9999	153.9999	176.9998	199.9998
108.4999	131.4999	154.4999	177.4998	200.4998
108.9999	131.9999	154.9998	177.9998	200.9998
109.4999	132.4999	155.4998	178.4998	201.4998
109.9999	132.9999	155.9999	178.9999	201.9998
110.4999	133.4999	156.4999	179.4998	202.4998
110.9999	133.9999	156.9998	179.9998	202.9998
111.4999	134.4999	157.4999	180.4998	203.4998
111.9999	134.9999	157.9999	180.9998	203.9998
112.4999	135.4999	158.4999	181.4998	204.4998
112.9999	135.9999	158.9998	181.9998	204.9998
113.4999	136.4999	159.4999	182.4998	205.4998

```
205.9998
206.4998
206.9998
207.4998
207.9998
208.4998
208.9998
209.4998
209.9998
210.4998
210.9998
211.4998
211.9998
212.4998
212.9998
213.4998
213.9998
214.4998
214.9998
215.4998
215.9998
216.4998
216.9998
217.4998
217.9998
218.4998
218.9998
219.4998
219.9998
220.4998
220.9998
221.4998
221.9998
222.4998
222.9998
223.4998
223.9998
224.4998
224.9998
225.4998
225.9998
226.4998
226.9998
227.4998
227.9998
228.4998
228.9998
229.4998
229.9998
230.4998
230.9998
231.4998
231.9998
232.4998
232.9998
233.4998
233.9998
234.4998
234.9998
235.4998
235.9998
236.4998
236.9998
237.4998
237.9998
238.4998
238.9998
239.4998
239.9998
240.4998
240.9998
241.4998
241.9998
242.4998
242.9998
243.4998
243.9998
244.4998
244.9998
245.4998
245.9998
246.4998
246.9998
247.4998
247.9998
248.4998
248.9998
249.4998
249.9997
250.4998
250.9998
251.4997
251.9998
252.4998
252.9998
253.4998
253.9998
254.4998
254.9998
255.4998
255.9998
256.4998
256.9998
257.4998
257.9998
258.4998
258.9998
259.4998
259.9998
260.4998
260.9998
261.4998
261.9998
262.4998
262.9998
263.4998
263.9998]/
264  %
fuselage
location

forces_tail=
[-1.5 -0.4 0
0.4 0.8 1.2
1.5]  %
magnitude
of force
```

% Match the deflection at the fore mid-location

fore_force1	0.6525	0.4016	0.1763	0.001028
=[0.9055	0.6466	0.3961	0.1716	-0.002216
0.8996	0.6408	0.3906	0.167	-0.005426
0.8937	0.635	0.3852	0.1624	-0.008603
0.8878	0.6292	0.3797	0.1579	-0.01175
0.8819	0.6233	0.3743	0.1533	-0.01486
0.876	0.6175	0.3689	0.1488	-0.01794
0.8701	0.6117	0.3635	0.1444	-0.02098
0.8642	0.6059	0.3581	0.1399	-0.024
0.8583	0.6001	0.3527	0.1355	-0.02698
0.8524	0.5943	0.3473	0.1311	-0.02993
0.8465	0.5885	0.342	0.1268	-0.03284
0.8406	0.5827	0.3367	0.1224	-0.03572
0.8347	0.5769	0.3314	0.1181	-0.03857
0.8288	0.5711	0.3261	0.1139	-0.04138
0.8229	0.5654	0.3208	0.1096	-0.04416
0.817	0.5596	0.3155	0.1054	-0.04691
0.8111	0.5539	0.3103	0.1012	-0.04962
0.8052	0.5481	0.305	0.0971	-0.05229
0.7993	0.5424	0.2998	0.09299	-0.05493
0.7934	0.5366	0.2946	0.08891	-0.05754
0.7875	0.5309	0.2895	0.08487	-0.0601
0.7816	0.5252	0.2843	0.08085	-0.06264
0.7757	0.5195	0.2792	0.07687	-0.06513
0.7699	0.5137	0.274	0.07292	-0.06759
0.764	0.5081	0.269	0.06901	-0.07001
0.7581	0.5024	0.2639	0.06513	-0.07239
0.7522	0.4967	0.2588	0.06128	-0.07473
0.7463	0.491	0.2538	0.05747	-0.07704
0.7404	0.4853	0.2488	0.05369	-0.0793
0.7346	0.4797	0.2438	0.04994	-0.08152
0.7287	0.474	0.2388	0.04623	-0.08371
0.7228	0.4684	0.2338	0.04255	-0.08585
0.7169	0.4628	0.2289	0.0389	-0.08795
0.7111	0.4572	0.224	0.03529	-0.09001
0.7052	0.4516	0.2191	0.03171	-0.09203
0.6993	0.446	0.2143	0.02817	-0.094
0.6935	0.4404	0.2094	0.02466	-0.09593
0.6876	0.4348	0.2046	0.02118	-0.09782
0.6817	0.4292	0.1998	0.01774	-0.09967
0.6759	0.4237	0.1951	0.01433	-0.1015
0.67	0.4182	0.1903	0.01096	-0.1032
0.6642	0.4126	0.1856	0.007613	-0.1049
0.6583	0.4071	0.1809	0.004304	-0.1066

-0.1082	-0.1348	-0.07144	0.07182	0.2782
-0.1098	-0.1344	-0.06912	0.0757	0.2832
-0.1114	-0.1339	-0.06677	0.07962	0.2883
-0.1128	-0.1334	-0.06438	0.08357	0.2934
-0.1143	-0.1328	-0.06195	0.08754	0.2985
-0.1157	-0.1322	-0.05949	0.09155	0.3036
-0.1171	-0.1315	-0.05699	0.09558	0.3087
-0.1184	-0.1308	-0.05445	0.09965	0.3138
-0.1196	-0.1301	-0.05187	0.1037	0.319
-0.1209	-0.1293	-0.04926	0.1079	0.3242
-0.122	-0.1284	-0.04661	0.112	0.3294
-0.1232	-0.1276	-0.04392	0.1162	0.3346
-0.1243	-0.1267	-0.0412	0.1204	0.3398
-0.1253	-0.1257	-0.03844	0.1246	0.3451
-0.1263	-0.1247	-0.03565	0.1289	0.3503
-0.1272	-0.1237	-0.03282	0.1332	0.3556
-0.1282	-0.1226	-0.02995	0.1375	0.3609
-0.129	-0.1215	-0.02705	0.1418	0.3662
-0.1298	-0.1203	-0.02411	0.1462	0.3716
-0.1306	-0.1191	-0.02114	0.1506	0.3769
-0.1313	-0.1179	-0.01813	0.155	0.3823
-0.132	-0.1166	-0.01509	0.1594	0.3877
-0.1327	-0.1153	-0.01201	0.1639	0.3931
-0.1333	-0.1139	-0.008897	0.1684	0.3985
-0.1338	-0.1125	-0.00575	0.1729	0.4039
-0.1343	-0.111	-0.002569	0.1775	0.4093
-0.1348	-0.1095	0.0006459	0.182	0.4148
-0.1352	-0.108	0.003895	0.1866	0.4202
-0.1356	-0.1064	0.007178	0.1912	0.4257
-0.1359	-0.1048	0.01049	0.1959	0.4312
-0.1362	-0.1032	0.01384	0.2005	0.4367
-0.1364	-0.1015	0.01723	0.2052	0.4422
-0.1366	-0.09977	0.02064	0.2099	0.4477
-0.1368	-0.098	0.02409	0.2147	0.4533
-0.1369	-0.09619	0.02757	0.2194	0.4588
-0.137	-0.09434	0.03108	0.2242	0.4644
-0.137	-0.09246	0.03463	0.229	0.4699
-0.137	-0.09053	0.03821	0.2338	0.4755
-0.1369	-0.08856	0.04182	0.2387	0.4811
-0.1368	-0.08656	0.04546	0.2435	0.4867
-0.1367	-0.08451	0.04913	0.2484	0.4923
-0.1365	-0.08243	0.05284	0.2533	0.498
-0.1362	-0.08031	0.05657	0.2583	0.5036
-0.1359	-0.07815	0.06034	0.2632	0.5093
-0.1356	-0.07595	0.06413	0.2682	0.5149
-0.1353	-0.07371	0.06796	0.2732	0.5206

0.5263	0.7934	1.151	0.6185	0.1131
0.5319	0.7993	1.14	0.607	0.1027
0.5376	0.8052	1.128	0.5956	0.09237
0.5433	0.811	1.116	0.5843	0.08207
0.549	0.8169	1.105	0.5729	0.07181
0.5548	0.8228	1.093	0.5615	0.06158
0.5605	0.8287	1.081	0.5502	0.05139
0.5662	0.8346	1.07	0.5389	0.04124
0.5719	0.8404	1.058	0.5275	0.03112
0.5777	0.8463	1.046	0.5162	0.02105
0.5834	0.8522	1.035	0.505	0.01101
0.5892	0.8581	1.023	0.4937	0.001016
0.595	0.8639	1.011	0.4824	-0.00894
0.6007	0.8698	0.9998	0.4712	-0.01885
0.6065	0.8757	0.9881	0.46	-0.02873
0.6123	0.8816	0.9765	0.4488	-0.03856
0.6181	0.8875	0.9649	0.4376	-0.04834
0.6239	0.8933	0.9532	0.4264	-0.05809
0.6297	0.8992	0.9416	0.4153	-0.06778
0.6355	0.9051	0.93	0.4042	-0.07744
0.6413	0.911	0.9184	0.3931	-0.08705
0.6471	0.9169	0.9067	0.382	-0.09661
0.6529	0.9227	0.8951	0.3709	-0.1061
0.6588	0.9286	0.8835	0.3599	-0.1156
0.6646	0.9345	0.8719	0.3489	-0.125
0.6704	0.9404	0.8603	0.3379	-0.1344
0.6762	0.9462	0.8487	0.3269	-0.1437
0.6821	0.9521	0.8371	0.316	-0.153
0.6879	0.958	0.8256	0.305	-0.1622
0.6938	0.9639	0.814	0.2941	-0.1714
0.6996	0.9697	0.8024	0.2833	-0.1805
0.7055	0.9756	0.7909	0.2724	-0.1895
0.7113	0.9815	0.7793	0.2616	-0.1986
0.7172	0.9874]	0.7678	0.2508	-0.2075
0.723		0.7562	0.24	-0.2164
0.7289	fore_force2	0.7447	0.2293	-0.2253
0.7347	=[1.268	0.7332	0.2186	-0.2341
0.7406	1.256	0.7216	0.2079	-0.2428
0.7465	1.245	0.7101	0.1972	-0.2515
0.7523	1.233	0.6986	0.1866	-0.2601
0.7582	1.221	0.6872	0.176	-0.2687
0.7641	1.21	0.6757	0.1654	-0.2772
0.7699	1.198	0.6642	0.1549	-0.2856
0.7758	1.186	0.6528	0.1444	-0.294
0.7817	1.175	0.6413	0.1339	-0.3023
0.7875	1.163	0.6299	0.1235	-0.3106

-0.3188	-0.6255	-0.7808	-0.7669	-0.5998
-0.3269	-0.6306	-0.7822	-0.7648	-0.5946
-0.335	-0.6357	-0.7836	-0.7627	-0.5893
-0.343	-0.6407	-0.7849	-0.7605	-0.584
-0.3509	-0.6456	-0.7861	-0.7583	-0.5786
-0.3588	-0.6505	-0.7872	-0.7559	-0.5731
-0.3666	-0.6552	-0.7883	-0.7535	-0.5676
-0.3744	-0.6599	-0.7892	-0.751	-0.562
-0.3821	-0.6646	-0.7901	-0.7485	-0.5564
-0.3897	-0.6691	-0.7909	-0.7458	-0.5507
-0.3972	-0.6736	-0.7916	-0.7431	-0.5449
-0.4047	-0.678	-0.7923	-0.7404	-0.5391
-0.4121	-0.6823	-0.7928	-0.7375	-0.5332
-0.4195	-0.6866	-0.7933	-0.7346	-0.5272
-0.4268	-0.6907	-0.7937	-0.7316	-0.5212
-0.434	-0.6948	-0.7941	-0.7286	-0.5151
-0.4412	-0.6988	-0.7943	-0.7254	-0.509
-0.4482	-0.7028	-0.7945	-0.7222	-0.5028
-0.4553	-0.7066	-0.7946	-0.719	-0.4966
-0.4622	-0.7104	-0.7946	-0.7156	-0.4903
-0.4691	-0.7141	-0.7945	-0.7122	-0.4839
-0.4759	-0.7177	-0.7944	-0.7087	-0.4775
-0.4827	-0.7212	-0.7942	-0.7052	-0.471
-0.4894	-0.7247	-0.7939	-0.7016	-0.4645
-0.496	-0.728	-0.7935	-0.6979	-0.4579
-0.5026	-0.7313	-0.7931	-0.6941	-0.4512
-0.5091	-0.7345	-0.7926	-0.6903	-0.4445
-0.5155	-0.7376	-0.792	-0.6864	-0.4378
-0.5219	-0.7406	-0.7913	-0.6825	-0.4309
-0.5282	-0.7435	-0.7906	-0.6784	-0.4241
-0.5344	-0.7464	-0.7898	-0.6743	-0.4171
-0.5406	-0.7492	-0.7889	-0.6702	-0.4102
-0.5467	-0.7519	-0.788	-0.666	-0.4031
-0.5528	-0.7545	-0.7869	-0.6617	-0.396
-0.5587	-0.757	-0.7858	-0.6573	-0.3889
-0.5647	-0.7594	-0.7847	-0.6529	-0.3817
-0.5705	-0.7618	-0.7834	-0.6484	-0.3745
-0.5763	-0.764	-0.7821	-0.6438	-0.3672
-0.582	-0.7662	-0.7807	-0.6392	-0.3598
-0.5877	-0.7683	-0.7792	-0.6345	-0.3524
-0.5933	-0.7704	-0.7777	-0.6297	-0.345
-0.5988	-0.7723	-0.7761	-0.6249	-0.3375
-0.6043	-0.7742	-0.7744	-0.62	-0.3299
-0.6097	-0.7759	-0.7726	-0.6151	-0.3223
-0.615	-0.7776	-0.7708	-0.61	-0.3147
-0.6203	-0.7792	-0.7689	-0.605	-0.307

-0.2992	0.1027	0.5653	1.049	1.304
-0.2914	0.1122	0.5757	1.059	1.291
-0.2836	0.1218	0.5861	1.07	1.277
-0.2757	0.1314	0.5966	1.08	1.264
-0.2678	0.1411	0.607	1.091	1.251
-0.2598	0.1508	0.6174	1.101	1.238
-0.2517	0.1605	0.6279	1.112	1.225
-0.2437	0.1702	0.6384	1.122	1.211
-0.2355	0.18	0.6488	1.133	1.198
-0.2274	0.1897	0.6593	1.143	1.185
-0.2192	0.1996	0.6698	1.154	1.172
-0.2109	0.2094	0.6802	1.165	1.159
-0.2026	0.2192	0.6907	1.175]	1.145
-0.1943	0.2291	0.7012		1.132
-0.1859	0.239	0.7117	fore_force3	1.119
-0.1774	0.2489	0.7222	=[1.716	1.106
-0.169	0.2589	0.7327	1.703	1.093
-0.1605	0.2688	0.7432	1.689	1.08
-0.1519	0.2788	0.7537	1.676	1.066
-0.1433	0.2888	0.7642	1.663	1.053
-0.1347	0.2989	0.7748	1.65	1.04
-0.126	0.3089	0.7853	1.636	1.027
-0.1173	0.319	0.7958	1.623	1.014
-0.1085	0.3291	0.8063	1.61	1.001
-0.09974	0.3392	0.8168	1.596	0.9879
-0.09091	0.3493	0.8274	1.583	0.9748
-0.08204	0.3594	0.8379	1.57	0.9618
-0.07313	0.3696	0.8484	1.556	0.9488
-0.06419	0.3798	0.859	1.543	0.9358
-0.05521	0.39	0.8695	1.53	0.9228
-0.04619	0.4002	0.88	1.516	0.9098
-0.03714	0.4104	0.8906	1.503	0.8968
-0.02805	0.4206	0.9011	1.49	0.8838
-0.01892	0.4309	0.9116	1.477	0.8709
-0.009766	0.4412	0.9222	1.463	0.858
-0.0005735	0.4514	0.9327	1.45	0.8451
0.008652	0.4617	0.9432	1.437	0.8322
0.01791	0.472	0.9538	1.423	0.8193
0.0272	0.4824	0.9643	1.41	0.8065
0.03653	0.4927	0.9749	1.397	0.7936
0.04588	0.503	0.9854	1.384	0.7808
0.05527	0.5134	0.9959	1.37	0.768
0.06469	0.5237	1.006	1.357	0.7552
0.07414	0.5341	1.017	1.344	0.7425
0.08362	0.5445	1.028	1.33	0.7297
0.09312	0.5549	1.038	1.317	0.717

0.7043	0.1526	-0.2972	-0.6069	-0.7496
0.6916	0.1415	-0.3055	-0.6119	-0.7508
0.679	0.1304	-0.3137	-0.6168	-0.752
0.6663	0.1195	-0.3218	-0.6216	-0.753
0.6537	0.1085	-0.3298	-0.6263	-0.754
0.6412	0.09766	-0.3378	-0.631	-0.7549
0.6286	0.08683	-0.3458	-0.6355	-0.7557
0.6161	0.07606	-0.3536	-0.64	-0.7564
0.6036	0.06534	-0.3614	-0.6444	-0.7571
0.5911	0.05467	-0.3691	-0.6487	-0.7577
0.5786	0.04406	-0.3768	-0.6529	-0.7582
0.5662	0.0335	-0.3844	-0.657	-0.7587
0.5538	0.02299	-0.3919	-0.6611	-0.7591
0.5414	0.01254	-0.3994	-0.665	-0.7594
0.5291	0.002152	-0.4068	-0.6689	-0.7596
0.5168	-0.008182	-0.4142	-0.6727	-0.7598
0.5045	-0.01846	-0.4214	-0.6764	-0.7598
0.4922	-0.02868	-0.4287	-0.6801	-0.7598
0.48	-0.03884	-0.4358	-0.6836	-0.7598
0.4678	-0.04893	-0.4429	-0.6871	-0.7596
0.4556	-0.05897	-0.4499	-0.6904	-0.7594
0.4435	-0.06895	-0.4568	-0.6937	-0.7591
0.4314	-0.07887	-0.4637	-0.697	-0.7588
0.4194	-0.08872	-0.4705	-0.7001	-0.7583
0.4073	-0.09851	-0.4773	-0.7031	-0.7578
0.3953	-0.1082	-0.4839	-0.7061	-0.7572
0.3834	-0.1179	-0.4906	-0.709	-0.7566
0.3715	-0.1275	-0.4971	-0.7118	-0.7558
0.3596	-0.137	-0.5036	-0.7145	-0.755
0.3477	-0.1465	-0.5099	-0.7171	-0.7541
0.3359	-0.1559	-0.5163	-0.7197	-0.7532
0.3241	-0.1652	-0.5225	-0.7221	-0.7522
0.3124	-0.1745	-0.5287	-0.7245	-0.7511
0.3007	-0.1837	-0.5348	-0.7268	-0.7499
0.2891	-0.1929	-0.5408	-0.7291	-0.7487
0.2774	-0.2019	-0.5467	-0.7312	-0.7473
0.2659	-0.2109	-0.5526	-0.7333	-0.746
0.2543	-0.2199	-0.5584	-0.7353	-0.7445
0.2428	-0.2287	-0.5641	-0.7372	-0.743
0.2314	-0.2375	-0.5698	-0.739	-0.7414
0.22	-0.2463	-0.5753	-0.7408	-0.7397
0.2086	-0.2549	-0.5808	-0.7424	-0.7379
0.1973	-0.2635	-0.5862	-0.744	-0.7361
0.1861	-0.272	-0.5915	-0.7456	-0.7342
0.1748	-0.2805	-0.5967	-0.747	-0.7323
0.1637	-0.2889	-0.6018	-0.7483	-0.7302

-0.7281	-0.5592	-0.2679	0.1092	0.5294
-0.726	-0.5541	-0.2605	0.118	0.5387
-0.7237	-0.5489	-0.253	0.1269	0.548
-0.7214	-0.5436	-0.2455	0.1357	0.5573
-0.719	-0.5383	-0.238	0.1446	0.5666
-0.7166	-0.5329	-0.2304	0.1535	0.5759
-0.7141	-0.5275	-0.2227	0.1625	0.5852
-0.7115	-0.522	-0.2151	0.1714	0.5946
-0.7088	-0.5165	-0.2074	0.1804	0.6039
-0.7061	-0.5109	-0.1996	0.1893	0.6132
-0.7033	-0.5052	-0.1918	0.1983	0.6225
-0.7005	-0.4995	-0.184	0.2074	0.6319
-0.6975	-0.4937	-0.1762	0.2164	0.6412
-0.6945	-0.4879	-0.1683	0.2254	0.6505
-0.6915	-0.482	-0.1603	0.2345	0.6598
-0.6883	-0.4761	-0.1524	0.2435	0.6692
-0.6851	-0.4701	-0.1444	0.2526	0.6785
-0.6819	-0.4641	-0.1364	0.2617	0.6878
-0.6785	-0.458	-0.1283	0.2708	0.6971
-0.6751	-0.4519	-0.1202	0.2799	0.7065
-0.6717	-0.4457	-0.1121	0.2891	0.7158
-0.6681	-0.4395	-0.1039	0.2982	0.7251
-0.6645	-0.4332	-0.09572	0.3074	0.7345
-0.6609	-0.4268	-0.0875	0.3165	0.7438
-0.6571	-0.4204	-0.07924	0.3257	0.7531
-0.6534	-0.414	-0.07096	0.3349	0.7624
-0.6495	-0.4075	-0.06265	0.3441	0.7718
-0.6456	-0.401	-0.0543	0.3533	0.7811
-0.6416	-0.3944	-0.04593	0.3625	0.7904
-0.6375	-0.3877	-0.03753	0.3717	0.7997
-0.6334	-0.3811	-0.02911	0.381	0.8091
-0.6293	-0.3743	-0.02065	0.3902	0.8184
-0.625	-0.3675	-0.01217	0.3994	0.8277
-0.6207	-0.3607	-0.00366	0.4087	0.837
-0.6164	-0.3538	0.004875	0.4179	0.8464
-0.6119	-0.3469	0.01344	0.4272	0.8557
-0.6074	-0.34	0.02202	0.4365	0.865
-0.6029	-0.333	0.03063	0.4457	0.8743]
-0.5983	-0.3259	0.03927	0.455	
-0.5936	-0.3188	0.04793	0.4643	fore_force4
-0.5889	-0.3117	0.05661	0.4736	=[2.167
-0.5841	-0.3045	0.06531	0.4829	2.153
-0.5792	-0.2973	0.07404	0.4921	2.138
-0.5743	-0.29	0.08279	0.5014	2.123
-0.5694	-0.2827	0.09156	0.5107	2.108
-0.5643	-0.2753	0.1004	0.52	2.093

-0.5958	-0.7268	-0.6997	-0.5339	-0.2604
-0.6005	-0.7278	-0.6975	-0.529	-0.2535
-0.605	-0.7288	-0.6952	-0.524	-0.2466
-0.6095	-0.7297	-0.6929	-0.5189	-0.2397
-0.6139	-0.7305	-0.6905	-0.5138	-0.2328
-0.6182	-0.7312	-0.688	-0.5087	-0.2258
-0.6225	-0.7319	-0.6854	-0.5035	-0.2188
-0.6266	-0.7325	-0.6828	-0.4983	-0.2118
-0.6307	-0.733	-0.6801	-0.493	-0.2047
-0.6347	-0.7335	-0.6774	-0.4877	-0.1976
-0.6386	-0.7338	-0.6746	-0.4823	-0.1905
-0.6424	-0.7341	-0.6717	-0.4769	-0.1834
-0.6462	-0.7344	-0.6688	-0.4714	-0.1762
-0.6498	-0.7345	-0.6658	-0.4659	-0.169
-0.6534	-0.7346	-0.6628	-0.4603	-0.1618
-0.6569	-0.7346	-0.6596	-0.4547	-0.1545
-0.6604	-0.7345	-0.6565	-0.449	-0.1473
-0.6637	-0.7344	-0.6532	-0.4433	-0.14
-0.667	-0.7342	-0.6499	-0.4376	-0.1327
-0.6701	-0.7339	-0.6466	-0.4318	-0.1253
-0.6732	-0.7336	-0.6431	-0.426	-0.1179
-0.6763	-0.7331	-0.6396	-0.4201	-0.1106
-0.6792	-0.7326	-0.6361	-0.4142	-0.1031
-0.6821	-0.7321	-0.6325	-0.4082	-0.0957
-0.6848	-0.7314	-0.6288	-0.4022	-0.08825
-0.6875	-0.7307	-0.6251	-0.3962	-0.08077
-0.6902	-0.7299	-0.6213	-0.3901	-0.07327
-0.6927	-0.7291	-0.6175	-0.384	-0.06576
-0.6952	-0.7282	-0.6136	-0.3778	-0.05822
-0.6976	-0.7272	-0.6096	-0.3716	-0.05066
-0.6999	-0.7261	-0.6056	-0.3653	-0.04309
-0.7021	-0.725	-0.6016	-0.359	-0.0355
-0.7043	-0.7238	-0.5974	-0.3527	-0.02789
-0.7064	-0.7225	-0.5932	-0.3464	-0.02026
-0.7084	-0.7212	-0.589	-0.34	-0.01262
-0.7104	-0.7197	-0.5847	-0.3335	-0.004955
-0.7122	-0.7183	-0.5804	-0.327	0.002721
-0.714	-0.7167	-0.576	-0.3205	0.01041
-0.7157	-0.7151	-0.5715	-0.314	0.01812
-0.7174	-0.7134	-0.567	-0.3074	0.02584
-0.7189	-0.7117	-0.5624	-0.3008	0.03357
-0.7204	-0.7098	-0.5578	-0.2941	0.04132
-0.7218	-0.708	-0.5531	-0.2875	0.04908
-0.7232	-0.706	-0.5484	-0.2807	0.05686
-0.7245	-0.704	-0.5436	-0.274	0.06465
-0.7256	-0.7019	-0.5388	-0.2672	0.07244

2.078	1.399	0.7455	0.164	-0.2919
2.063	1.384	0.7319	0.1526	-0.3003
2.049	1.37	0.7183	0.1412	-0.3085
2.034	1.355	0.7048	0.13	-0.3168
2.019	1.341	0.6913	0.1188	-0.3249
2.004	1.326	0.6778	0.1076	-0.333
1.989	1.311	0.6644	0.09652	-0.341
1.974	1.297	0.651	0.0855	-0.3489
1.96	1.282	0.6376	0.07454	-0.3568
1.945	1.268	0.6243	0.06365	-0.3645
1.93	1.253	0.611	0.05283	-0.3722
1.915	1.239	0.5978	0.04207	-0.3799
1.9	1.224	0.5846	0.03139	-0.3874
1.886	1.21	0.5714	0.02077	-0.3949
1.871	1.196	0.5583	0.01021	-0.4023
1.856	1.181	0.5452	-0.0002707	-0.4097
1.841	1.167	0.5322	-0.01069	-0.4169
1.826	1.152	0.5192	-0.02103	-0.4241
1.811	1.138	0.5063	-0.03131	-0.4312
1.797	1.124	0.4934	-0.04153	-0.4382
1.782	1.109	0.4805	-0.05167	-0.4451
1.767	1.095	0.4677	-0.06174	-0.452
1.752	1.081	0.4549	-0.07175	-0.4587
1.737	1.067	0.4422	-0.08169	-0.4654
1.723	1.052	0.4295	-0.09156	-0.472
1.708	1.038	0.4169	-0.1014	-0.4785
1.693	1.024	0.4043	-0.1111	-0.485
1.678	1.01	0.3918	-0.1208	-0.4913
1.664	0.9956	0.3793	-0.1304	-0.4976
1.649	0.9815	0.3669	-0.1399	-0.5038
1.634	0.9674	0.3545	-0.1494	-0.5099
1.619	0.9533	0.3422	-0.1588	-0.5159
1.605	0.9393	0.3299	-0.1681	-0.5218
1.59	0.9252	0.3177	-0.1774	-0.5276
1.575	0.9112	0.3055	-0.1866	-0.5334
1.56	0.8973	0.2934	-0.1957	-0.5391
1.546	0.8833	0.2814	-0.2048	-0.5446
1.531	0.8694	0.2694	-0.2138	-0.5501
1.516	0.8555	0.2574	-0.2227	-0.5556
1.502	0.8417	0.2455	-0.2316	-0.5609
1.487	0.8278	0.2337	-0.2404	-0.5661
1.472	0.814	0.2219	-0.2492	-0.5713
1.458	0.8003	0.2102	-0.2579	-0.5764
1.443	0.7865	0.1986	-0.2665	-0.5813
1.428	0.7728	0.187	-0.275	-0.5863
1.414	0.7592	0.1755	-0.2835	-0.5911

0.3332	-0.1941	-0.5532	-0.7422	-0.7785
0.3202	-0.2038	-0.559	-0.7445	-0.7777
0.3073	-0.2135	-0.5648	-0.7468	-0.7769
0.2944	-0.223	-0.5705	-0.749	-0.7761
0.2816	-0.2325	-0.5761	-0.7512	-0.7751
0.2688	-0.2419	-0.5816	-0.7532	-0.7741
0.2562	-0.2512	-0.587	-0.7552	-0.7731
0.2436	-0.2604	-0.5924	-0.7571	-0.772
0.2311	-0.2695	-0.5977	-0.759	-0.7708
0.2186	-0.2786	-0.6029	-0.7607	-0.7696
0.2062	-0.2875	-0.608	-0.7624	-0.7683
0.1939	-0.2964	-0.6131	-0.7641	-0.767
0.1816	-0.3052	-0.6181	-0.7656	-0.7656
0.1694	-0.3139	-0.623	-0.7671	-0.7641
0.1573	-0.3225	-0.6278	-0.7685	-0.7626
0.1452	-0.331	-0.6325	-0.7699	-0.761
0.1332	-0.3394	-0.6372	-0.7712	-0.7594
0.1213	-0.3478	-0.6418	-0.7724	-0.7577
0.1094	-0.3561	-0.6463	-0.7735	-0.756
0.09763	-0.3642	-0.6508	-0.7746	-0.7542
0.0859	-0.3723	-0.6551	-0.7756	-0.7524
0.07424	-0.3803	-0.6594	-0.7765	-0.7505
0.06264	-0.3883	-0.6636	-0.7774	-0.7485
0.05111	-0.3961	-0.6678	-0.7782	-0.7465
0.03965	-0.4038	-0.6718	-0.7789	-0.7444
0.02826	-0.4115	-0.6758	-0.7796	-0.7423
0.01693	-0.4191	-0.6797	-0.7802	-0.7402
0.005677	-0.4266	-0.6836	-0.7807	-0.738
-0.005509	-0.434	-0.6873	-0.7812	-0.7357
-0.01663	-0.4413	-0.691	-0.7816	-0.7334
-0.02767	-0.4486	-0.6946	-0.7819	-0.731
-0.03864	-0.4557	-0.6982	-0.7822	-0.7286
-0.04955	-0.4628	-0.7016	-0.7824	-0.7261
-0.06037	-0.4698	-0.705	-0.7825	-0.7236
-0.07113	-0.4767	-0.7083	-0.7826	-0.721
-0.08181	-0.4835	-0.7115	-0.7826	-0.7184
-0.09241	-0.4903	-0.7147	-0.7825	-0.7157
-0.1029	-0.4969	-0.7178	-0.7824	-0.713
-0.1134	-0.5035	-0.7208	-0.7822	-0.7103
-0.1238	-0.51	-0.7237	-0.782	-0.7075
-0.1341	-0.5164	-0.7266	-0.7817	-0.7046
-0.1443	-0.5227	-0.7294	-0.7813	-0.7017
-0.1544	-0.529	-0.7321	-0.7809	-0.6988
-0.1645	-0.5352	-0.7347	-0.7804	-0.6958
-0.1744	-0.5412	-0.7373	-0.7798	-0.6927
-0.1843	-0.5473	-0.7398	-0.7792	-0.6896

0.08025	0.4459	2.589	1.773	1.002
0.08807	0.4539	2.571	1.755	0.9867
0.09591	0.4619	2.554	1.738	0.9709
0.1037	0.4699	2.536	1.721	0.9551
0.1116	0.4779	2.518	1.703	0.9394
0.1195	0.4859	2.5	1.686	0.9238
0.1273	0.4939	2.482	1.669	0.9082
0.1352	0.5019	2.464	1.651	0.8926
0.1431	0.5098	2.446	1.634	0.8771
0.151	0.5178	2.428	1.617	0.8617
0.1589	0.5258	2.41	1.6	0.8463
0.1668	0.5338	2.392	1.583	0.831
0.1747	0.5418	2.374	1.565	0.8157
0.1826	0.5498	2.356	1.548	0.8005
0.1906	0.5578	2.339	1.531	0.7853
0.1985	0.5658	2.321	1.514	0.7702
0.2064	0.5738]	2.303	1.497	0.7552
0.2144		2.285	1.48	0.7402
0.2223	fore_force5	2.267	1.463	0.7252
0.2303	=[3.075	2.249	1.446	0.7104
0.2382	3.057	2.232	1.429	0.6956
0.2462	3.039	2.214	1.412	0.6808
0.2542	3.021	2.196	1.396	0.6661
0.2621	3.003	2.178	1.379	0.6515
0.2701	2.985	2.16	1.362	0.6369
0.2781	2.967	2.143	1.345	0.6224
0.286	2.949	2.125	1.328	0.608
0.294	2.931	2.107	1.312	0.5936
0.302	2.913	2.089	1.295	0.5793
0.31	2.895	2.072	1.279	0.565
0.318	2.877	2.054	1.262	0.5508
0.326	2.859	2.036	1.245	0.5367
0.334	2.841	2.019	1.229	0.5227
0.3419	2.823	2.001	1.213	0.5087
0.3499	2.805	1.983	1.196	0.4948
0.3579	2.787	1.966	1.18	0.4809
0.3659	2.769	1.948	1.163	0.4672
0.3739	2.751	1.93	1.147	0.4535
0.3819	2.733	1.913	1.131	0.4398
0.3899	2.715	1.895	1.115	0.4263
0.3979	2.697	1.878	1.099	0.4128
0.4059	2.679	1.86	1.082	0.3993
0.4139	2.661	1.843	1.066	0.386
0.4219	2.643	1.825	1.05	0.3727
0.4299	2.625	1.808	1.034	0.3594
0.4379	2.607	1.79	1.018	0.3463

-0.6865	-0.5024	-0.2695	0.9999948	23.99999
-0.6833	-0.4977	-0.2642	1.500005	24.49998
-0.6801	-0.4929	-0.2589	1.999999	24.99998
-0.6769	-0.4882	-0.2536	2.5	25.49998
-0.6736	-0.4834	-0.2483	2.999997	25.99998
-0.6702	-0.4786	-0.243	3.499996	26.49998
-0.6668	-0.4738	-0.2377	4.000003	26.99998
-0.6634	-0.469	-0.2324	4.500007	27.49998
-0.6599	-0.4641	-0.2271	4.999999	27.99998
-0.6564	-0.4592	-0.2218	5.500002	28.49998
-0.6529	-0.4543	-0.2165	6.000003	28.99998
-0.6493	-0.4494	-0.2112	6.499993	29.49998
-0.6457	-0.4445	-0.2059	6.999995	29.99998
-0.642	-0.4396	-0.2006	7.499998	30.49998
-0.6383	-0.4346	-0.1953	8.000008	30.99998
-0.6346	-0.4296	-0.19	8.499998	31.49998
-0.6308	-0.4246	-0.1847	9.000007	31.99998
-0.627	-0.4196	-0.1794	9.499992	32.49997
-0.6231	-0.4146	-0.174	9.999993	32.99997
-0.6192	-0.4095	-0.1687	10.5	33.49998
-0.6153	-0.4045	-0.1634	11	33.99997
-0.6114	-0.3994	-0.1581	11.5	34.49997
-0.6074	-0.3943	-0.1528	12	34.99997
-0.6033	-0.3892	-0.1475	12.5	35.49997
-0.5993	-0.3841	-0.1422	12.99999	35.99997
-0.5952	-0.379	-0.1368	13.5	36.49997
-0.5911	-0.3739	-0.1315	13.99999	36.99998
-0.5869	-0.3687	-0.1262	14.49999	37.49998
-0.5827	-0.3636	-0.1209	14.99999	37.99997
-0.5785	-0.3584	-0.1156	15.5	38.49997
-0.5742	-0.3532	-0.1103	15.99999	38.99997
-0.57	-0.3481	-0.1049	16.49999	39.49997
-0.5656	-0.3429	-0.09964	16.99998	39.99996
-0.5613	-0.3377	-0.09432	17.5	40.49997
-0.5569	-0.3325	-0.08901	17.99999	40.99997
-0.5525	-0.3272	-0.0837	18.49998	41.49997
-0.5481	-0.322	-0.07839	18.99999	41.99997
-0.5436	-0.3168	-0.07308	19.49999	42.49997
-0.5392	-0.3116	-0.06777	20	42.99997
-0.5347	-0.3063	-0.06246	20.49998	43.49996
-0.5301	-0.3011	-0.05715	20.99998	43.99997
-0.5256	-0.2958	-0.05184]	21.49999	44.49996
-0.521	-0.2906		21.99999	44.99997
-0.5164	-0.2853	width_fore	22.49999	45.49996
-0.5117	-0.28	=[0	22.99999	45.99997
-0.5071	-0.2748	0.4999951	23.49998	46.49996

46.99997	69.99994	92.99992	115.9999	138.9999
47.49995	70.49993	93.49992	116.4999	139.4999
47.99995	70.99995	93.99992	116.9999	139.9999
48.49996	71.49995	94.49992	117.4999	140.4999
48.99995	71.99993	94.99992	117.9999	140.9999
49.49997	72.49994	95.49992	118.4999	141.4999
49.99997	72.99994	95.99992	118.9999	141.9999
50.49996	73.49993	96.49991	119.4999	142.4999
50.99996	73.99994	96.99992	119.9999	142.9999
51.49996	74.49995	97.49992	120.4999	143.4999
51.99996	74.99993	97.99991	120.9999	143.9999
52.49996	75.49993	98.49992	121.4999	144.4999
52.99996	75.99992	98.99992	121.9999	144.9999
53.49995	76.49994	99.49992	122.4999	145.4999
53.99995	76.99992	99.99992	122.9999	145.9999
54.49996	77.49993	100.4999	123.4999	146.4999
54.99995	77.99994	100.9999	123.9999	146.9999
55.49995	78.49993	101.4999	124.4999	147.4999
55.99996	78.99993	101.9999	124.9999	147.9999
56.49996	79.49993	102.4999	125.4999	148.4999
56.99996	79.99994	102.9999	125.9999	148.9999
57.49995	80.49992	103.4999	126.4999	149.4999
57.99995	80.99993	103.9999	126.9999	149.9999
58.49995	81.49993	104.4999	127.4999	150.4999
58.99995	81.99993	104.9999	127.9999	150.9999
59.49995	82.49992	105.4999	128.4999	151.4999
59.99996	82.99993	105.9999	128.9999	151.9999
60.49996	83.49993	106.4999	129.4999	152.4999
60.99995	83.99993	106.9999	129.9999	152.9999
61.49994	84.49993	107.4999	130.4999	153.4999
61.99994	84.99993	107.9999	130.9999	153.9999
62.49995	85.49993	108.4999	131.4999	154.4999
62.99995	85.99992	108.9999	131.9999	154.9998
63.49995	86.49992	109.4999	132.4999	155.4998
63.99995	86.99992	109.9999	132.9999	155.9999
64.49995	87.49992	110.4999	133.4999	156.4999
64.99994	87.99993	110.9999	133.9999	156.9998
65.49995	88.49993	111.4999	134.4999	157.4999
65.99994	88.99992	111.9999	134.9999	157.9999
66.49995	89.49993	112.4999	135.4999	158.4999
66.99994	89.99992	112.9999	135.9999	158.9998
67.49994	90.49991	113.4999	136.4999	159.4999
67.99994	90.99991	113.9999	136.9999	159.9999
68.49995	91.49992	114.4999	137.4999	160.4999
68.99995	91.99992	114.9999	137.9999	160.9998
69.49995	92.49992	115.4999	138.4999	161.4998

161.9998	184.9999	207.9998	230.9998	253.9998
162.4999	185.4999	208.4998	231.4998	254.4998
162.9999	185.9998	208.9998	231.9998	254.9998
163.4998	186.4998	209.4998	232.4998	255.4998
163.9999	186.9998	209.9998	232.9998	255.9998
164.4999	187.4998	210.4998	233.4998	256.4998
164.9999	187.9998	210.9998	233.9998	256.9998
165.4999	188.4998	211.4998	234.4998	257.4998
165.9999	188.9998	211.9998	234.9998	257.9998
166.4998	189.4998	212.4998	235.4998	258.4998
166.9999	189.9998	212.9998	235.9998	258.9998
167.4998	190.4998	213.4998	236.4998	259.4998
167.9998	190.9998	213.9998	236.9998	259.9998
168.4999	191.4998	214.4998	237.4998	260.4998
168.9999	191.9998	214.9998	237.9998	260.9998
169.4999	192.4998	215.4998	238.4998	261.4998
169.9998	192.9998	215.9998	238.9998	261.9998
170.4998	193.4998	216.4998	239.4998	262.4998
170.9999	193.9998	216.9998	239.9998	262.9998
171.4998	194.4998	217.4998	240.4998	263.4998
171.9998	194.9998	217.9998	240.9998	263.9998]/
172.4998	195.4998	218.4998	241.4998	264 %
172.9998	195.9998	218.9998	241.9998	fuselage
173.4998	196.4998	219.4998	242.4998	location
173.9999	196.9998	219.9998	242.9998	
174.4998	197.4998	220.4998	243.4998	forces_fore
174.9999	197.9998	220.9998	243.9998	=[-3 -1 0 1
175.4998	198.4998	221.4998	244.4998	3] %
175.9998	198.9998	221.9998	244.9998	magnitude
176.4998	199.4998	222.4998	245.4998	of force
176.9998	199.9998	222.9998	245.9998	
177.4998	200.4998	223.4998	246.4998	
177.9998	200.9998	223.9998	246.9998	
178.4998	201.4998	224.4998	247.4998	
178.9999	201.9998	224.9998	247.9998	
179.4998	202.4998	225.4998	248.4998	
179.9998	202.9998	225.9998	248.9998	
180.4998	203.4998	226.4998	249.4998	
180.9998	203.9998	226.9998	249.9997	
181.4998	204.4998	227.4998	250.4998	
181.9998	204.9998	227.9998	250.9998	
182.4998	205.4998	228.4998	251.4997	
182.9998	205.9998	228.9998	251.9998	
183.4998	206.4998	229.4998	252.4998	
183.9998	206.9998	229.9998	252.9998	
184.4998	207.4998	230.4998	253.4998	